# FRICTION ROLL DRIVES AND ASSOCIATED BRACKETS
# PIECE-PART DATA AND REPLACEMENT PROCEDURES

## 1. GENERAL

1.01 This section covers the information necessary for ordering parts to be used in the maintenance of friction roll drives and associated motor brackets. It also covers approved procedures for replacing these parts.

1.02 This section is reissued to incorporate material from the addendum in its proper location. In this process marginal arrows have been omitted.

1.03 Part 2 of this section covers the piece part numbers and the corresponding names of the parts which it is practicable to replace in the field in the maintenance of the above apparatus. No attempt should be made to replace parts not designated. Part 2 also contains explanatory figures showing the different parts. This information is called "Piece Part Data."

1.04 Part 3 of this section covers approved procedures for the replacement of the parts covered in Part 2. This information is called "Replacement Procedures."

1.05 The code designation of a friction roll drive is stamped in red near the left end of either the top or bottom channel. The side of the drive on which this designation appears is the front of the drive.

1.06 Procedures for reconditioning the bearings of the worm case housing (gear case) are covered in Section 159-720-814, procedures for installing bushings in the ends of friction roll drive shafts are covered in Section 159-720-811 and procedures for installing the oil retainer ring on the gear case of friction roll drives are covered in Section 159-720-813.

1.07 Due to the number of different types of drives, a figure in the section may be used to indicate item numbers for several different types of drives in addition to the drive actually illustrated. This procedure is followed to keep the section to as small a size as practicable although it is recognized that in some cases all the item numbers that appear on the figure may not apply to all the drives covered by the figure. Therefore, reference should be made to the tables shown on pages 45 to 60, inclusive, of the section for final information regarding the parts for a particular drive.

## 2. PIECE PART DATA

2.01 The figures included in this part show the various piece parts in their proper relation to other parts of the drive or motor bracket. The parts on the individual figures are designated by means of item numbers. These item numbers are used for reference purposes only, the piece part being shown for the corresponding item number on the tables shown on pages 45 to 60 inclusive. Do not specify the item numbers shown on the figures for ordering information. The piece part numbers of the various parts are given together with the names of the parts as listed by the Western Electric Company Merchandise Department. When these names differ from those in general use in the field the latter names in some cases are shown in parenthesis.

2.02 When ordering piece parts for replacement purposes, give both the number and name of the piece part. For example: "P-170374 Gear Case." Do not refer to the B.S.P. number or to any information shown in parenthesis following the piece part numbers.

2.03 Piece part data and replacement procedures for vertical drive shaft couplings are covered in Section 159-735-801 covering piece part data and replacement procedures for vertical drive shafts and associated apparatus.

© American Telephone and Telegraph Company, 1962
Printed in U.S.A.

2.04 The piece part data for coded friction roll drives are given in the figures indicated in the following table. The motor brackets are shown in Fig. 75.

| DRIVE | GEAR CASE EXTERNAL PARTS | | GEAR CASE INTERNAL PARTS | | BEARING BOX EXTERNAL PARTS | | BEARING BOX INTERNAL PARTS | | ALARM MECHANISM |
|---|---|---|---|---|---|---|---|---|---|
| | WORM END | NON WORM END | WORM END | NON WORM END | WORM END | NON WORM END | WORM END | NON WORM END | |
| 1A | 17 | - | 20 | - | 17 | - | - | - | 11 |
| 1C | 17 | - | 20 | - | 17 | - | - | - | 11 |
| 1D | 17 | - | 20 | - | 17 | - | - | - | 11 |
| 1E | 17 | - | 20 | - | 17 | - | - | - | 11 |
| 2A | 53 | - | 56 | - | 53 | - | - | - | 11 |
| 3A | 17 | 19 | 20 | 21 | 17 | 19 | - | - | 11 |
| 3C | 17 | 19 | 20 | 21 | 17 | 19 | - | - | 11 |
| 3D | 17 | 18 | 20 | 20 | 17 | 18 | - | - | 11 |
| 3E | 17 | 18 | 20 | 20 | 17 | 18 | - | - | 11 |
| 3F | 17 | 19 | 20 | 21 | 17 | 19 | - | - | 11 |
| 4A | 53 | 55 | 56 | 57 | 53 | 55 | - | - | 11 |
| 4B | 53 | 54 | 56 | 56 | 53 | 54 | - | - | 11 |
| 17A | 17 | - | 20 | - | 17 | - | - | - | 11 |
| 17B | 29 | - | 32 | - | 29 | - | 32 | - | 12 |
| 17E | 29 | - | 32 | - | 29 | - | 32 | - | 12 |
| 18A | 17 | 19 | 20 | 21 | 17 | 19 | - | - | 11 |
| 18B | 17 | 18 | 20 | 20 | 17 | 18 | - | - | 11 |
| 18C | 29 | 31 | 32 | 34 | 29 | 31 | 32 | 34 | 12 |
| 18D | 29 | 30 | 32 | 33 | 29 | 30 | 32 | 33 | 12 |
| 18G | 29 | 31 | 32 | 34 | 29 | 31 | 32 | 34 | 12 |
| 18H | 29 | 31 | 32 | 34 | 29 | 31 | 32 | 34 | 12 |
| 18J | 29 | 30 | 32 | 33 | 29 | 30 | 32 | 33 | 12 |
| 19A | 17 | - | 20 | - | 17 | - | - | - | 11 |
| 19B | 29 | - | 32 | - | 29 | - | 32 | - | 12 |
| 19E | 29 | - | 32 | - | 29 | - | 32 | - | 11 |
| 20A | 17 | 19 | 20 | 21 | 17 | 19 | - | - | 11 |
| 20B | 17 | 18 | 20 | 20 | 17 | 18 | - | - | 12 |
| 20C | 29 | 31 | 32 | 34 | 29 | 31 | 32 | 34 | 12 |
| 20D | 29 | 30 | 32 | 33 | 29 | 30 | 32 | 33 | 12 |
| 20G | 29 | 31 | 32 | 34 | 29 | 31 | 32 | 34 | 12 |
| 20H | 29 | 30 | 32 | 33 | 29 | 30 | 32 | 33 | 12 |
| 21A | 17 | - | 20 | - | 17 | - | - | - | 11 |
| 21B | 17 | - | 20 | - | 17 | - | - | - | 11 |
| 21C | 17 | - | 20 | - | 17 | - | - | - | 11 |
| 21D | 17 | - | 20 | - | 17 | - | - | - | 11 |
| 21E | 29 | - | 32 | - | 29 | - | 32 | - | 12 |
| 21F | 29 | - | 32 | - | 29 | - | 32 | - | 12 |
| 21G | 29 | - | 32 | - | 29 | - | 32 | - | 12 |
| 21H | 29 | - | 32 | - | 29 | - | 32 | - | 12 |
| 21R | 29 | - | 32 | - | 29 | - | 32 | - | 12 |
| 22A | 53 | - | 56 | - | 53 | - | - | - | 11 |
| 22B | 53 | - | 56 | - | 53 | - | - | - | 12 |
| 22C | 58 | - | 61 | - | 58 | - | 61 | - | 12 |
| 23A | 17 | 19 | 20 | 21 | 17 | 19 | - | - | 11 |
| 23B | 17 | 18 | 20 | 20 | 17 | 18 | - | - | 11 |
| 23C | 17 | 19 | 20 | 21 | 17 | 19 | - | - | 11 |
| 23D | 17 | 18 | 20 | 20 | 17 | 18 | - | - | 11 |
| 23F | 17 | 19 | 20 | 21 | 17 | 19 | - | - | 11 |
| 23G | 29 | 31 | 32 | 34 | 29 | 31 | 32 | 34 | 12 |
| 23H | 29 | 30 | 32 | 33 | 29 | 30 | 32 | 33 | 12 |
| 23J | 29 | 31 | 32 | 34 | 29 | 31 | 32 | 34 | 12 |
| 23K | 29 | 30 | 32 | 33 | 29 | 30 | 32 | 33 | 12 |
| 23L | 29 | 31 | 32 | 34 | 29 | 31 | 32 | 34 | 12 |
| 23T | 29 | 31 | 32 | 34 | 29 | 31 | 32 | 34 | 12 |
| 23U | 29 | 30 | 32 | 33 | 29 | 30 | 32 | 33 | 12 |
| 23W | 17 | 18 | 20 | 20 | 17 | 18 | - | - | 11 |
| 24A | 53 | 55 | 56 | 57 | 53 | 55 | - | - | 11 |
| 24B | 53 | 54 | 56 | 56 | 53 | 54 | - | - | 11 |
| 24C | 53 | 55 | 56 | 57 | 53 | 55 | - | - | 12 |

| DRIVE | GEAR CASE EXTERNAL PARTS | | GEAR CASE INTERNAL PARTS | | BEARING BOX EXTERNAL PARTS | | BEARING BOX INTERNAL PARTS | | ALARM MECHANISM |
|---|---|---|---|---|---|---|---|---|---|
| | WORM END | NON WORM END | WORM END | NON WORM END | WORM END | NON WORM END | WORM END | NON WORM END | |
| 24D | 53 | 54 | 56 | 56 | 53 | 54 | - | - | 12 |
| 24E | 58 | 60 | 61 | 62 | 58 | 60 | 61 | 62 | 12 |
| 24F | 58 | 59 | 61 | 61 | 58 | 59 | 61 | 61 | 12 |
| 25A | 17 | - | 20 | - | 17 | - | - | - | 11 |
| 25B | 29 | - | 32 | - | 29 | - | 32 | - | 12 |
| 25E | 29 | - | 32 | - | 29 | - | 32 | - | 12 |
| 26A | 17 | 19 | 20 | 21 | 17 | 19 | - | - | 11 |
| 26B | 17 | 18 | 20 | 20 | 17 | 18 | - | - | 11 |
| 26C | 29 | 31 | 32 | 34 | 29 | 31 | 32 | 34 | 12 |
| 26D | 29 | 30 | 32 | 33 | 29 | 30 | 32 | 33 | 12 |
| 26G | 29 | 31 | 32 | 34 | 29 | 31 | 32 | 34 | 12 |
| 26H | 29 | 30 | 32 | 33 | 29 | 30 | 32 | 33 | 12 |
| 35A | 29 | - | 35 | - | 29 | - | 35 | - | 12 |
| 45A | 63 | - | 65 | - | 63 | - | 65 | - | 12 |
| 46A | 63 | 64 | 65 | 66 | 63 | 64 | 65 | 66 | 12 |
| 47A | 67 | - | 69 | - | 67 | - | 69 | - | 12 |
| 48A | 67 | 68 | 69 | 70 | 67 | 68 | 69 | 70 | 12 |
| 49A | 29 | 31 | 35 | 36 | 29 | 31 | 35 | 36 | 12 |

2.05 The following D-specification drives are the same as coded drives indicated except for the worms, worm wheels, and where asterisked, retractile springs on the governor.

| D-Spec. Drive | Coded Drives | Worm | Worm Wheel |
|---|---|---|---|
| *D-18616 | 18A | P-170011 | P-170014 |
| *D-18617 | 19A | P-170011 | P-170014 |
| *D-18618 | 25A | P-170011 | P-170014 |
| *D-18619 | 1A | P-159205 | P-159206 |
| *D-18620 | 3A | P-159205 | P-159206 |
| *D-18621 | 3C | P-159205 | P-159206 |
| *D-18622 | 2A | P-159205 | P-159206 |
| *D-18623 | 4A | P-159205 | P-159206 |
| D-44970 | 21C | P-159205 | P-159206 |
| D-86114 | 18G | P-170011 | P-170014 |
| D-86115 | 26C | P-170011 | P-170014 |
| D-86116 | 26G | P-170011 | P-170014 |
| D-86503 | 17E | † | P-170014 |
| D-90206 | 24E | P-170538 | P-159206 |
| D-90207 | 24C | P-170538 | P-159206 |
| D-90208 | 45A | † | † |
| D-90209 | 23G | P-170538 | P-159206 |
| D-90212 | 21E | P-170538 | P-159206 |
| D-90213 | 21R | P-170538 | P-159206 |
| D-90214 | 23T | P-170538 | P-159206 |
| D-90215 | 46A | † | † |
| D-90216 | 35A | † | † |
| D-156693 | 25E | † | † |

* When it is necessary to order a retractile spring shown as Item 107 in Fig. 11, order governor retractile spring per D number of drive.

† When it is necessary to order a worm or worm wheel and the piece part number is not given, order the worm or worm wheel per D number of drive.

2.06 The following D-specification drives with the exception of D-95727 drive, are drives which have been converted in the field from double unit drives to single unit drives and the parts on one side of the drive have been replaced by parts of another drive. Order parts according to the code of side of the drive affected as stamped or as indicated in the following table.

| *No. of Converted Drive | Drives Equivalent to Converted Drive |
|---|---|
| D-86646 | Front Side - 21E |
| | Rear Side - 21A |
| D-88718 | Front Side - 19B |
| | Rear Side - 19A |
| D-95629 | Front Side - 22C |
| | Rear Side - 22A |
| †D-95727 | Both Sides - 21D |
| D-95831 | Front Side - 22C |
| | Rear Side - 2A |
| D-95853 | Front Side - 21E |
| | Rear Side - 1A |
| D-96748 | Front Side - D-90212 |
| | Rear Side - D-18619 |
| D-156728 | Front Side - D-156727 |
| | Rear Side - 3C |

* Do not order parts by the D-number of the drive. Before conversion the D-86646, D-88718, D-85629, D-95727, D-95831, D-95853, D-96748 and D-156728 drives were the No. 23A, 20A, 24A, 21D, 4A, 3A, 3A per D-18620 and 3C drives respectively.

† Order all parts of the D-95727 drive the same as for the No. 21D drive except the roll guard on the gear case, left end, which has been changed to P-154451 and the roll guard on the bearing box, right end, which has been changed to P-170506.

2.07 The following D-specification drives are the same as coded drives indicated except that the worm and non worm ends are reversed.

| D-Spec. Drive | Similar To Coded Drive |
|---|---|
| D-47916 | 18G |
| D-78012 | 18C |

2.08 The following D-specification drive is the same as the coded drive indicated except for parts of the drive shown in the table:

| D-Spec. Drive | Coded Drive | Friction Roll Assemblies |
|---|---|---|
| *D-80526 | 21E | D-80526 |

* When it is necessary to order a friction roll assembly and the piece part is not given, order the assembly per D number of drive.

2.09 The following D-specification drives are the same as coded drives indicated except for parts of drives shown in table.

| D-Spec. Drive | Coded Drive | Bearing Box | Spur Gear Assembly | *Spur Gear |
|---|---|---|---|---|
| D-140276 | 45A | D-140276-1 | D-140276-3 | D-140276-4 |
| D-140277 | 46A | D-140276-1 | D-140276-3 | D-140276-4 |

* The spur gear referred to in the fifth column is the spur gear that meshes with the spur gear assembly.

2.10 The following D-specification drives are the same as coded drives indicated in the table except that one or both vertical shaft couplings are replaced by thrust collars shown in Fig. 14.

| D-Spec. Drive | Coded Drive | Couplings Replaced at |
|---|---|---|
| D-140486 | 35A | Both Ends |
| D-140658 | 35A | One End |

2.11 Wherever Bristo setscrews are specified for replacement purposes throughout the section, Allen hexagon socket cup-point setscrews of the same size may be substituted.

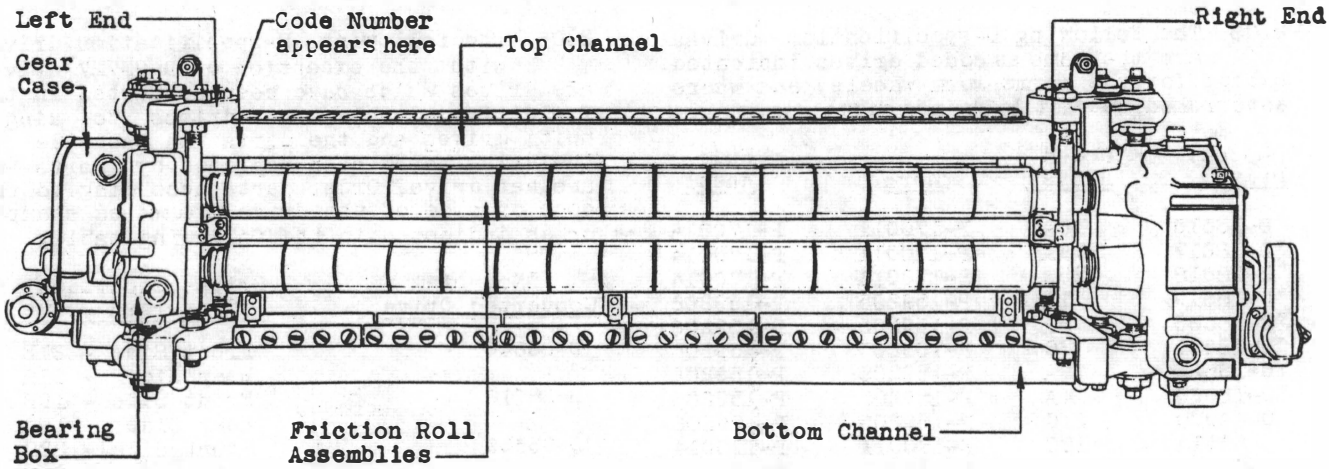


Fig. 1 - Illustrating Front of Friction Roll Drive

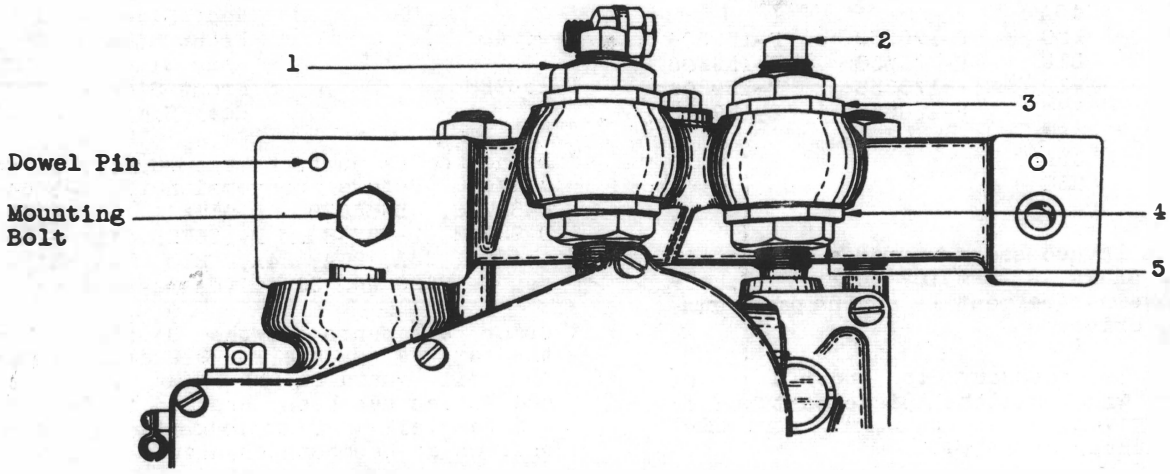


Fig. 2 - Eccentric Bushing Assembly

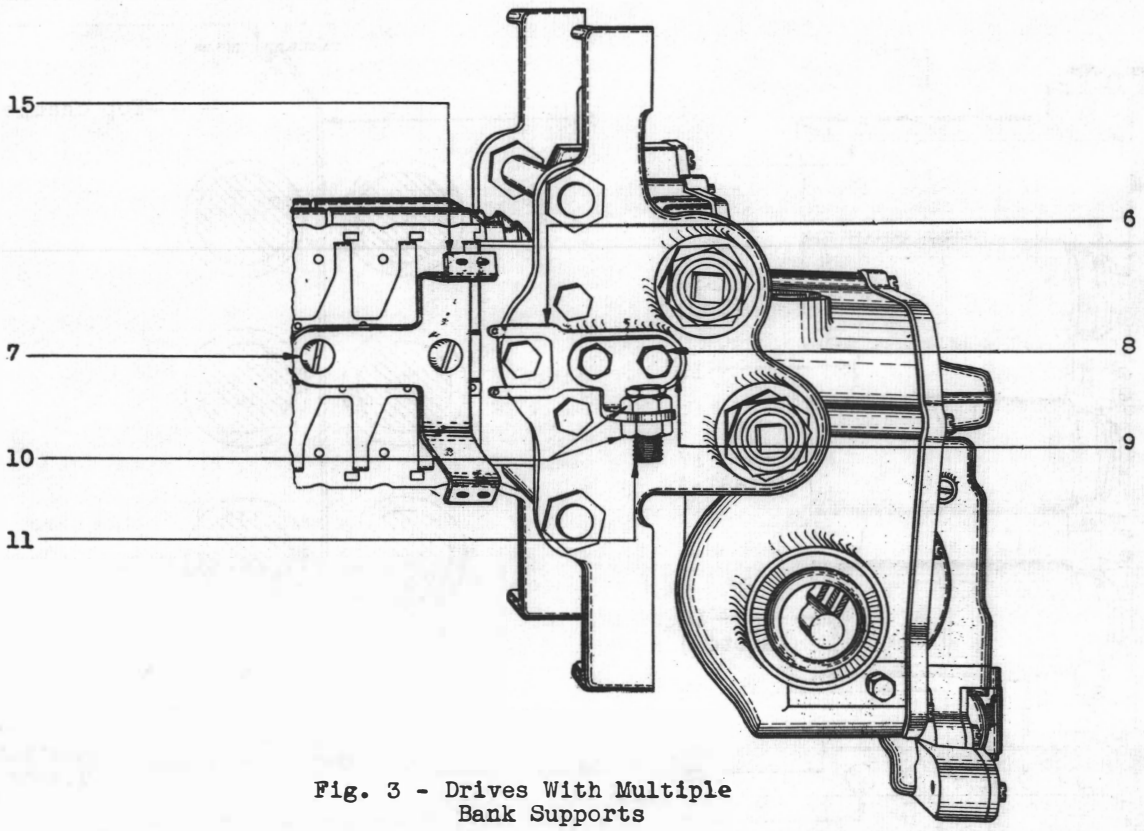


Fig. 3 - Drives With Multiple Bank Supports

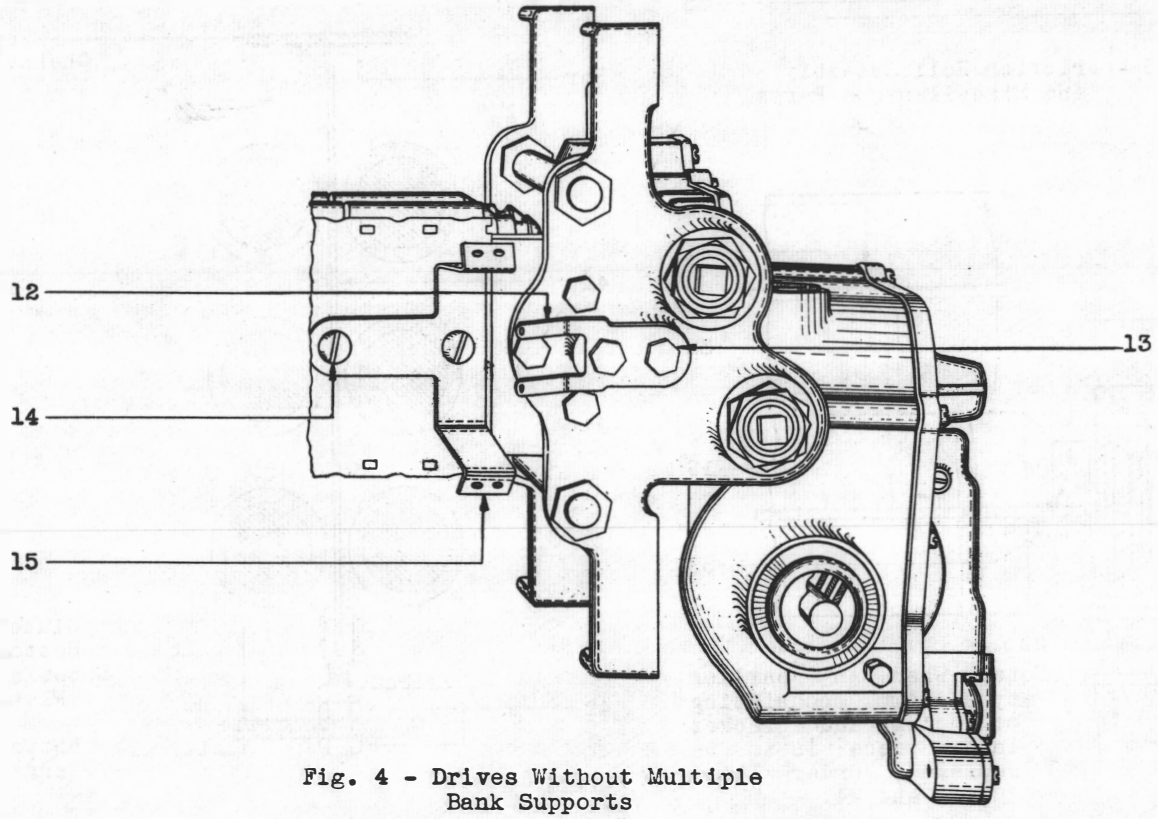


Fig. 4 - Drives Without Multiple Bank Supports

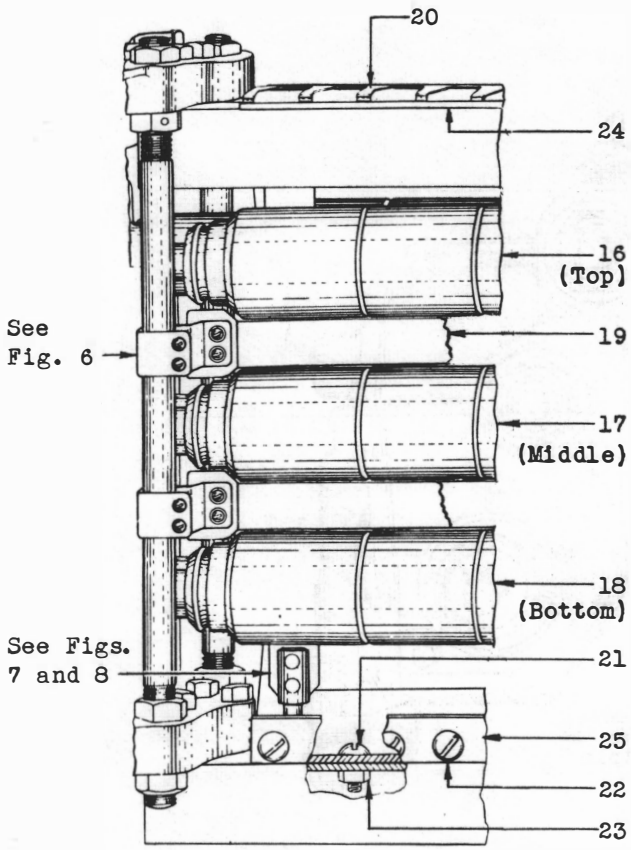


Fig. 5 - Friction Roll Assembly and Miscellaneous Parts

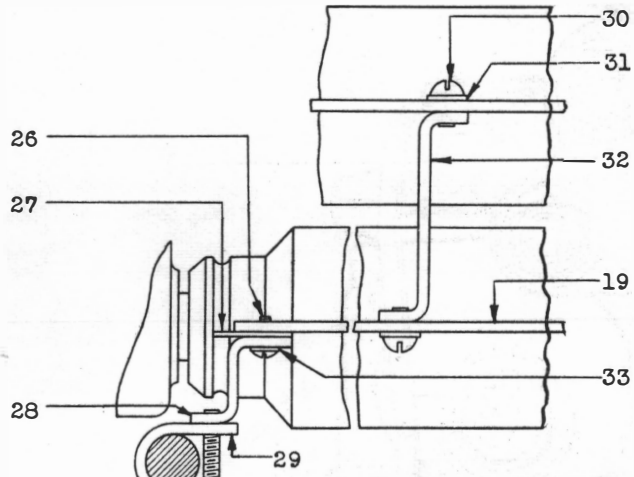


Note: When an earlier type clamp consisting of a clamp and bracket in one piece is to be replaced, order Items 28, 29 and 34.

Fig. 6 - Roll Guard and Supports

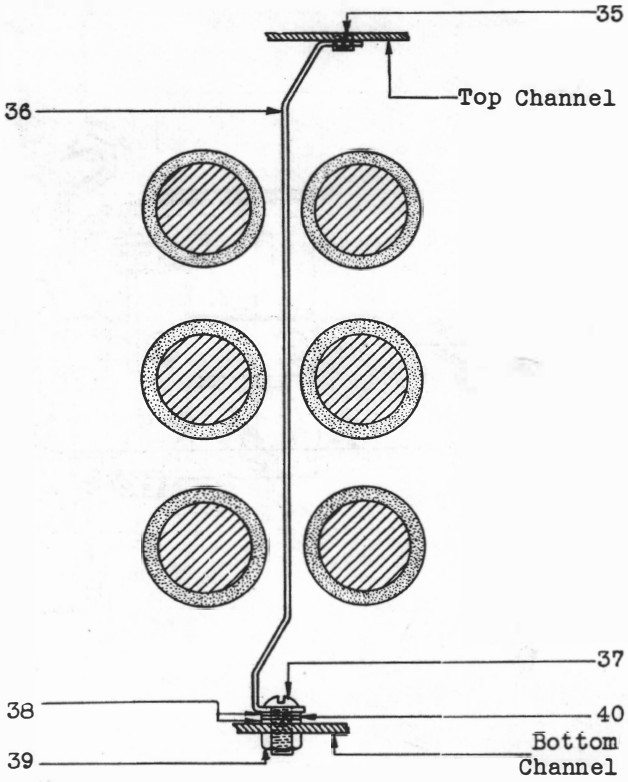


Fig. 7 - Guard Plate Assembly

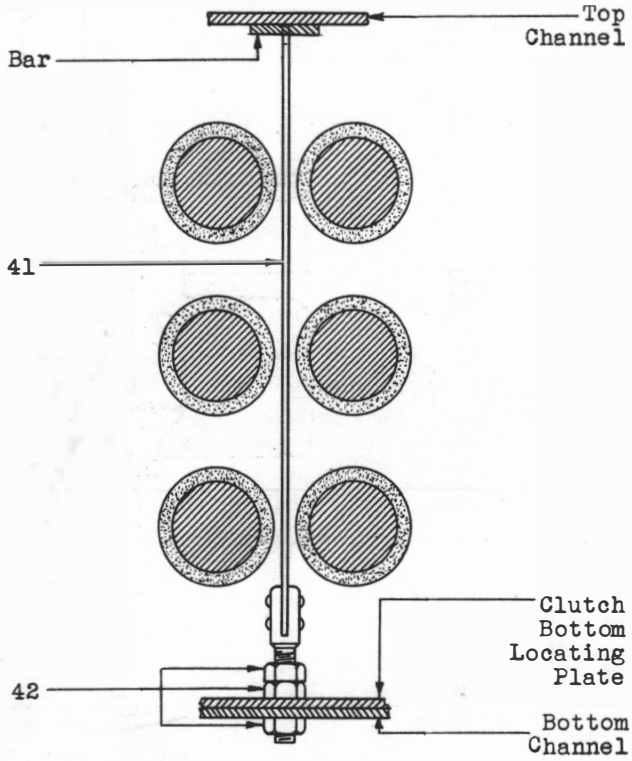


Fig. 8 - Guard Plate Assembly

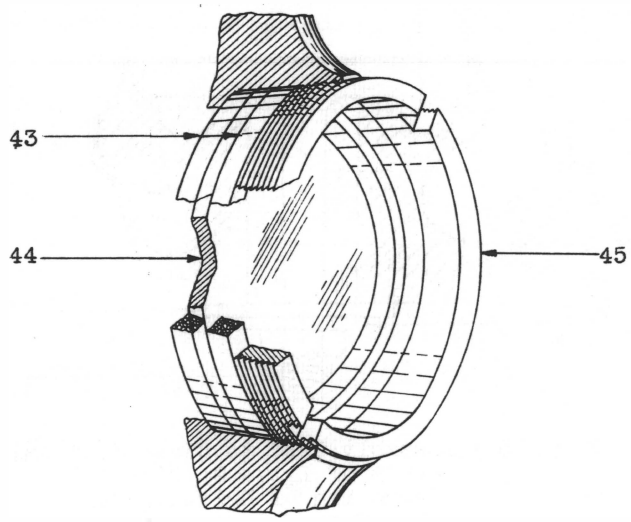


Fig. 9 - Oil Sight Assembly

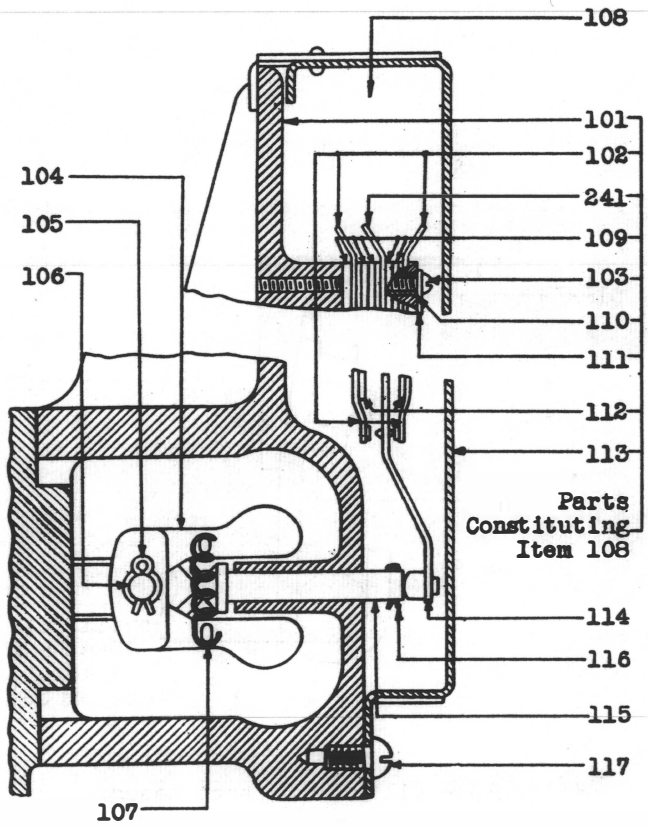


Fig. 11 - Cast Weight Alarm Mechanism

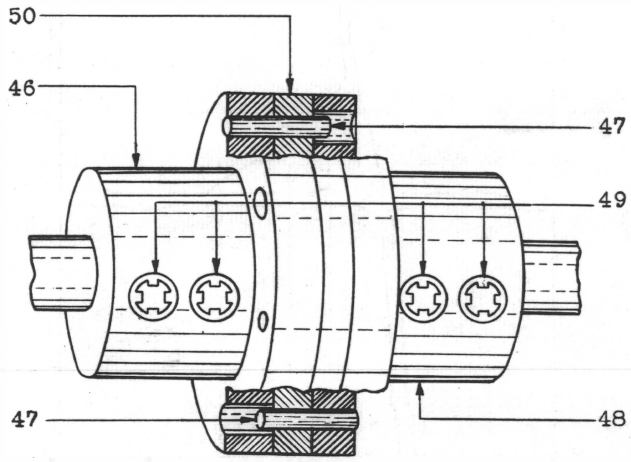


Fig. 10 - Motor Coupling Assembly

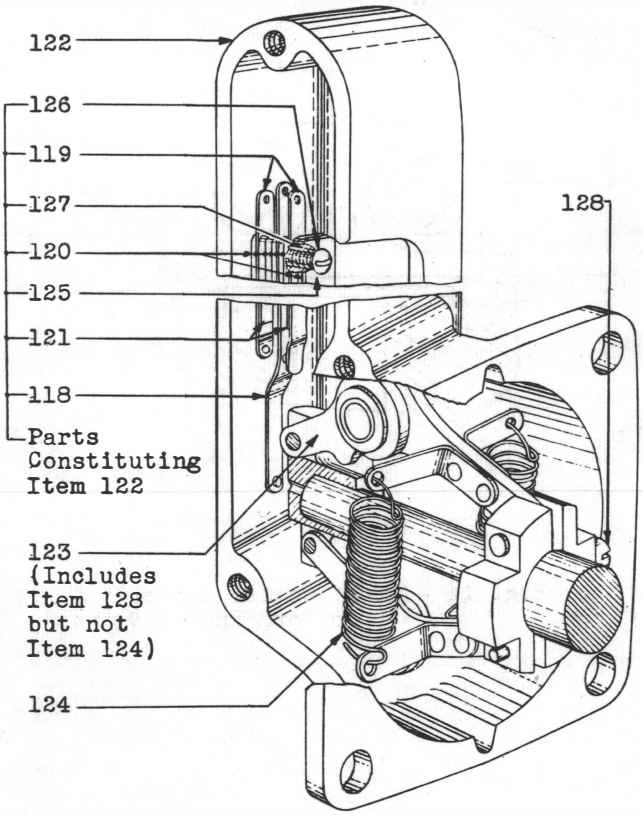


Fig. 12 - Link Type Alarm Mechanism

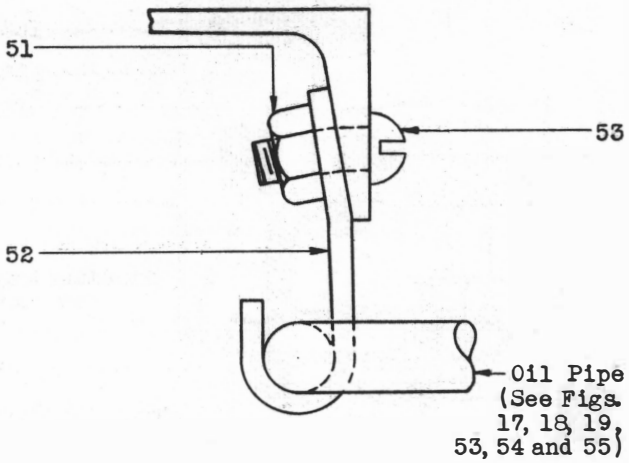


Fig. 13 - Oil Pipe Support Assembly

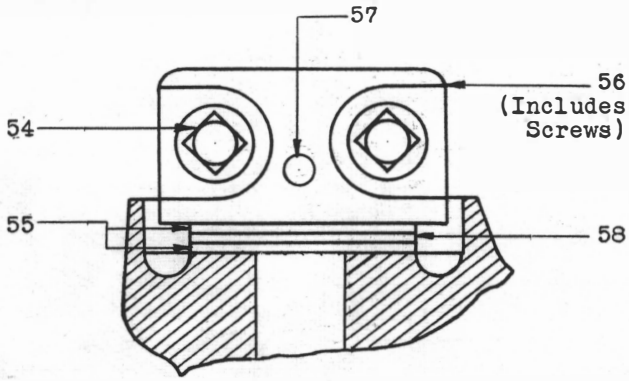


Fig. 14 -Thrust Collar Assembly
(Non Worm End of Drives)

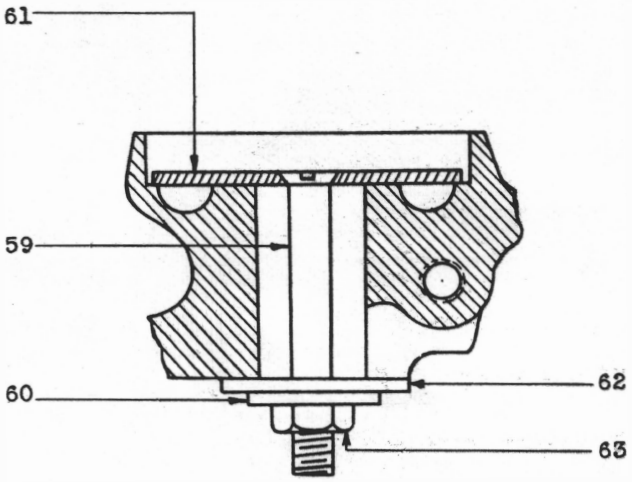


Fig. 15 - Assembly Used to Close Vertical Shaft of Drive Opening (Worm End of Drives, and Non-Worm End of Converted Drives)

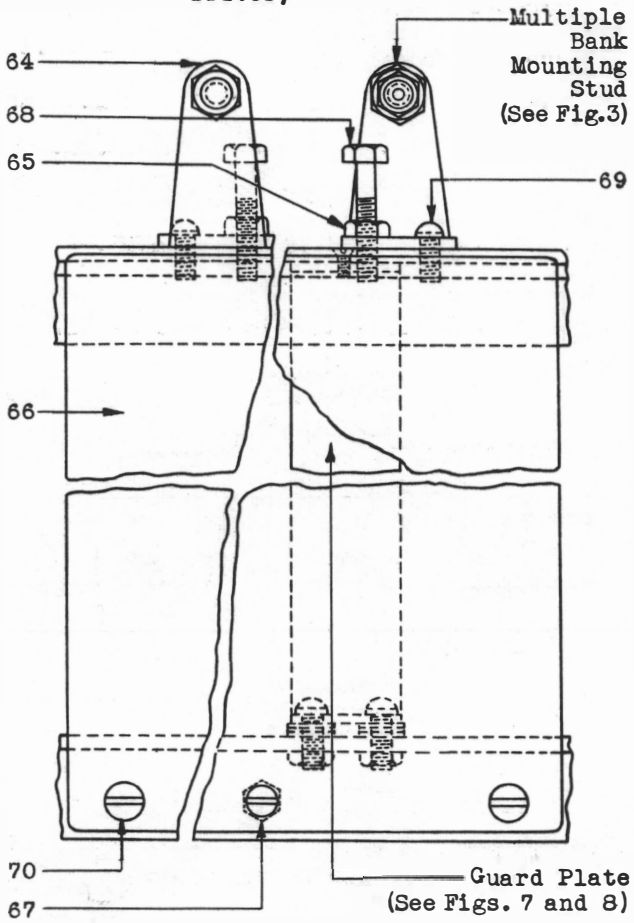


Fig. 16 - Guard Plate Cover and Bracket Assembly

## SINGLE SPEED DRIVES WITH EXTERNAL OIL PIPES

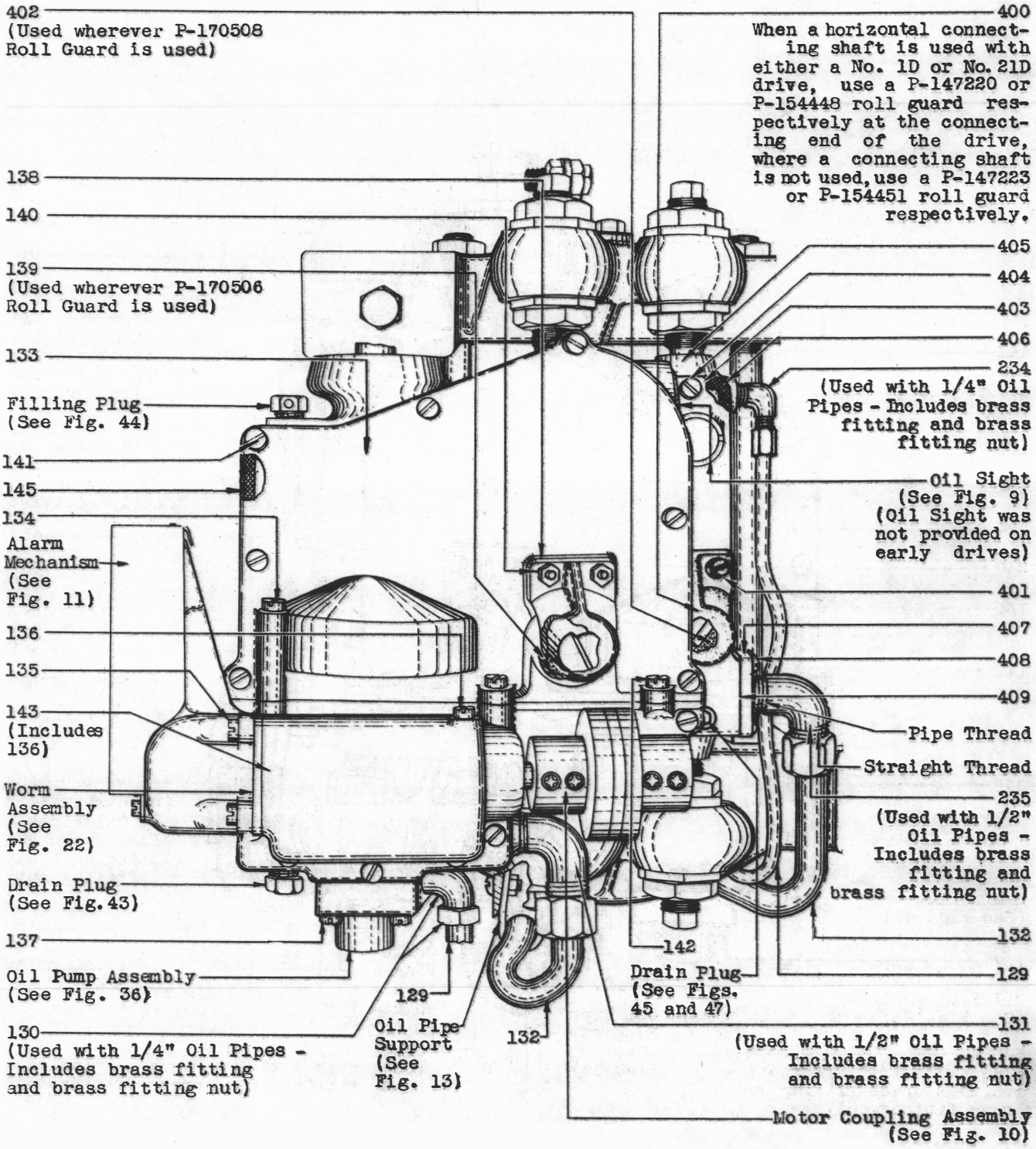


Fig. 17 - External Parts - Gear Case and Bearing Box Worm End of Drives (1 and 3 Types and Nos. 17A, 18A, 18B, 19A, 20A, 20B, 21A, 21B, 21C, 21D, 23A, 23B, 23C, 23D, 23F, 23W, 25A, 26A, and 26B Drives)

## SINGLE SPEED DRIVES WITH EXTERNAL OIL PIPES

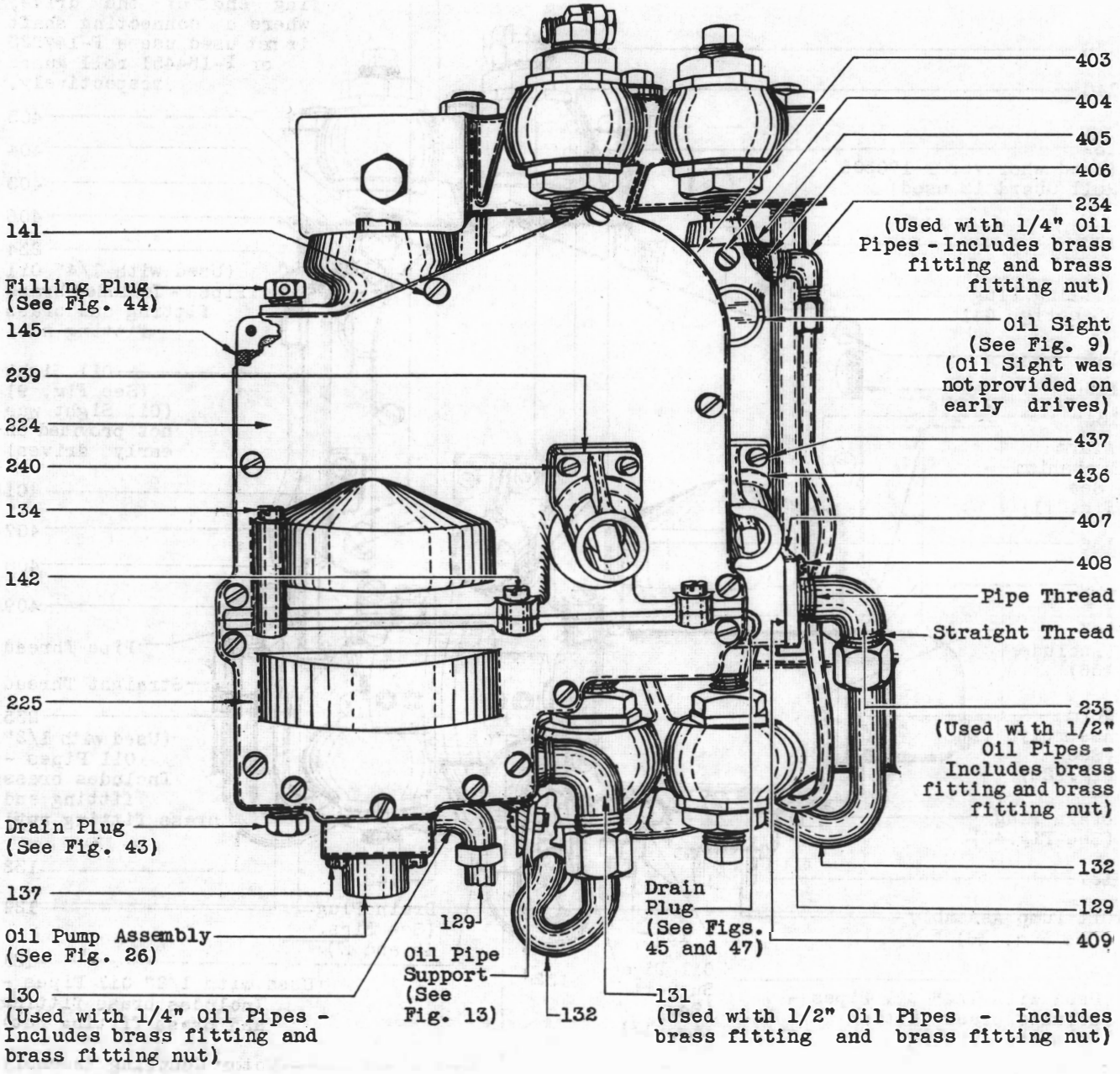


Fig. 18 - External Parts - Gear Case and Bearing Box
Non Worm End of Converted Drives
(Nos. 3D,E, 18B, 20B, 23B,D,W and 26B Drives)

## SINGLE SPEED DRIVES WITH EXTERNAL OIL PIPES

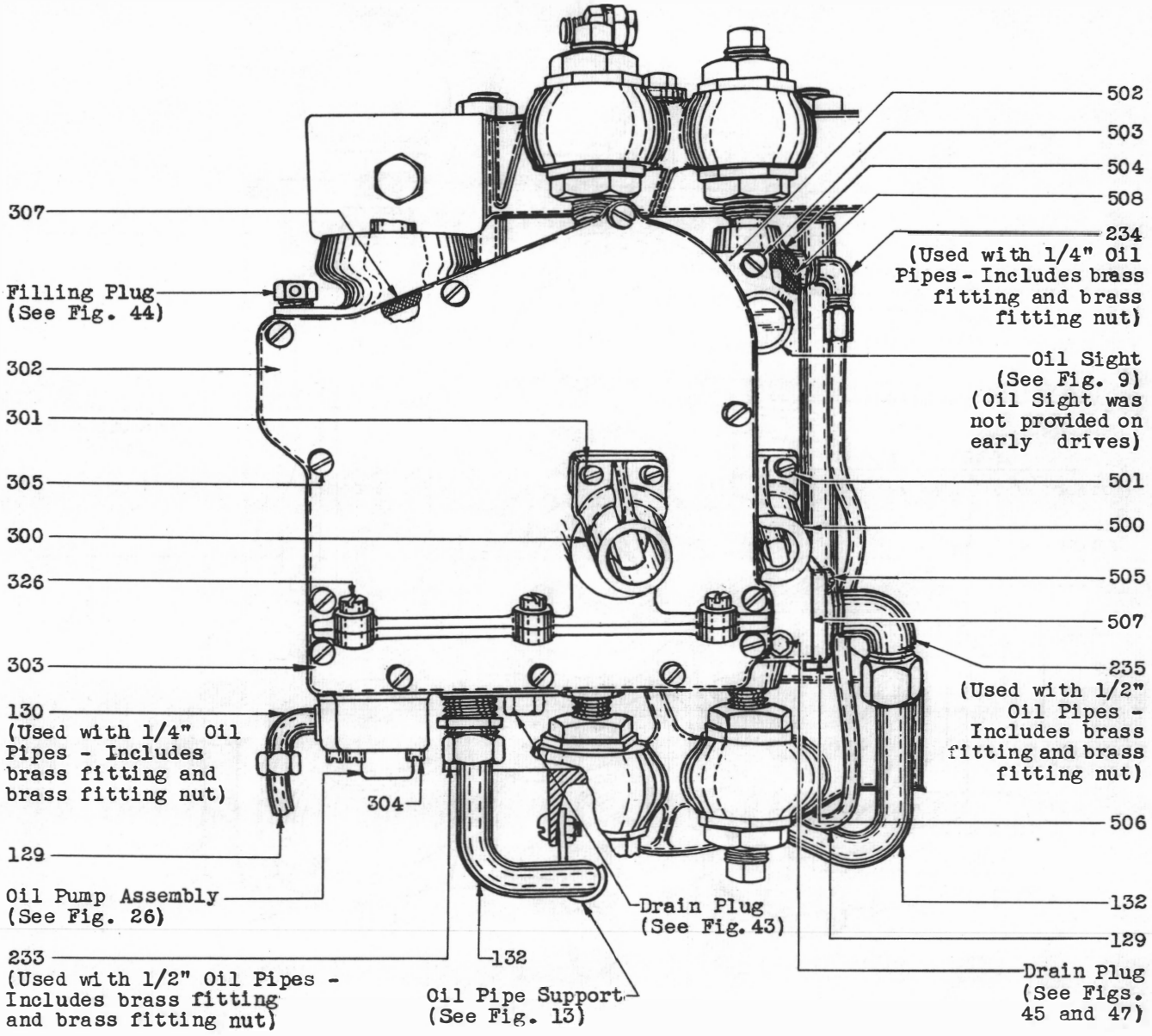


Fig. 19 - External Parts - Gear Case and Bearing Box
Non Worm End of Drives
(Nos. 3A,C,F, 18A, 20A, 23A,C,F and 26A Drives)

## SINGLE SPEED DRIVES WITH EXTERNAL OIL PIPES

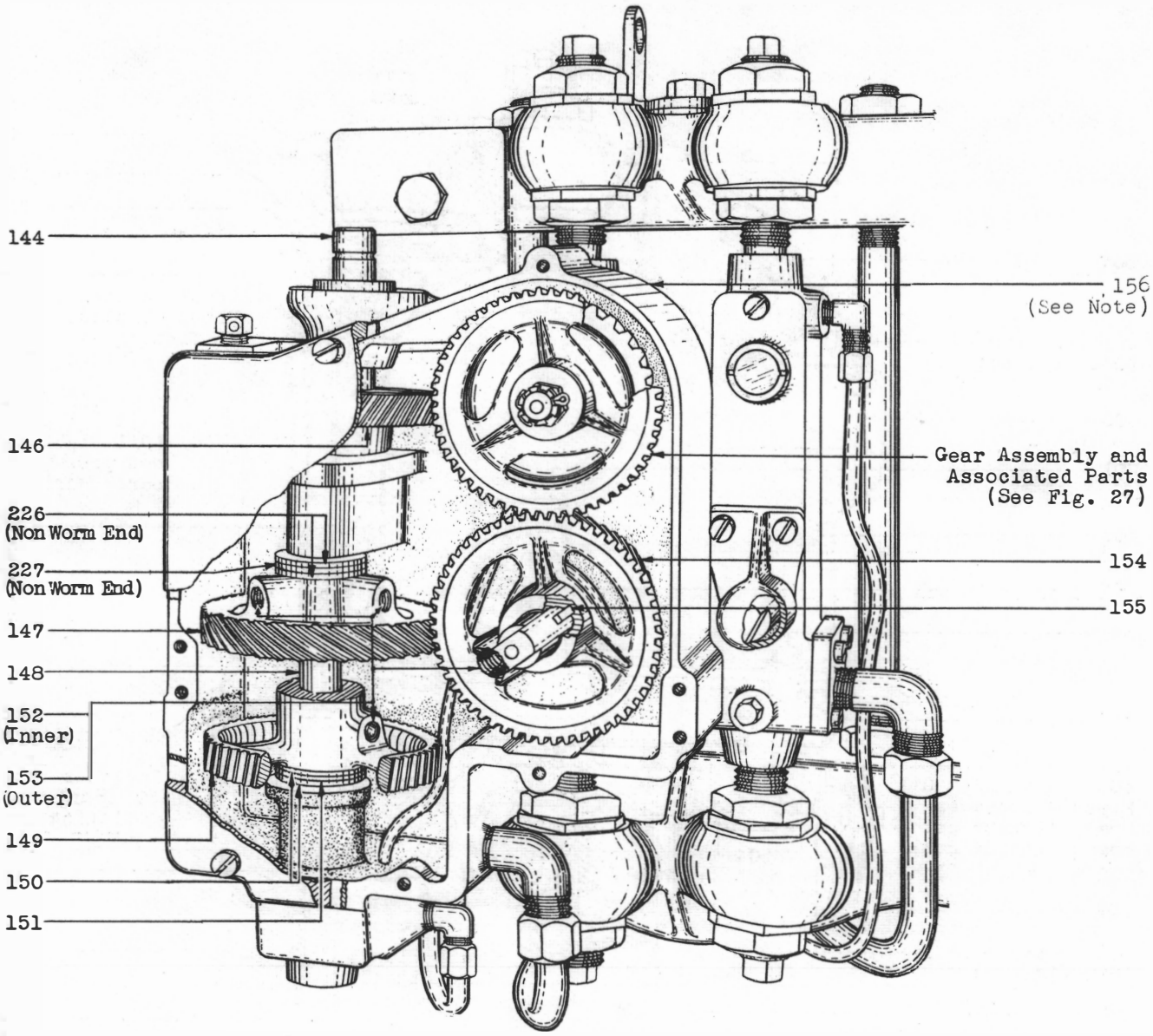


Note - When ordering gear case for replacement purposes, specify that the gear case shall be furnished complete with oil return pipe and plug.

**Fig. 20 - Internal Parts - Gear Case**
Worm End of Drives
(1 and 3 Types and Nos. 17A, 18A, B, 19A, 20A, B, 21A, B, C, D, 23A, B, C, D, F, W, 25A, 26A and B Drives)
Non Worm End of Converted Drives
(Nos. 3D, E, 18B, 20B, 23B, D, W and 26B Drives)

## SINGLE SPEED DRIVES WITH EXTERNAL OIL PIPES

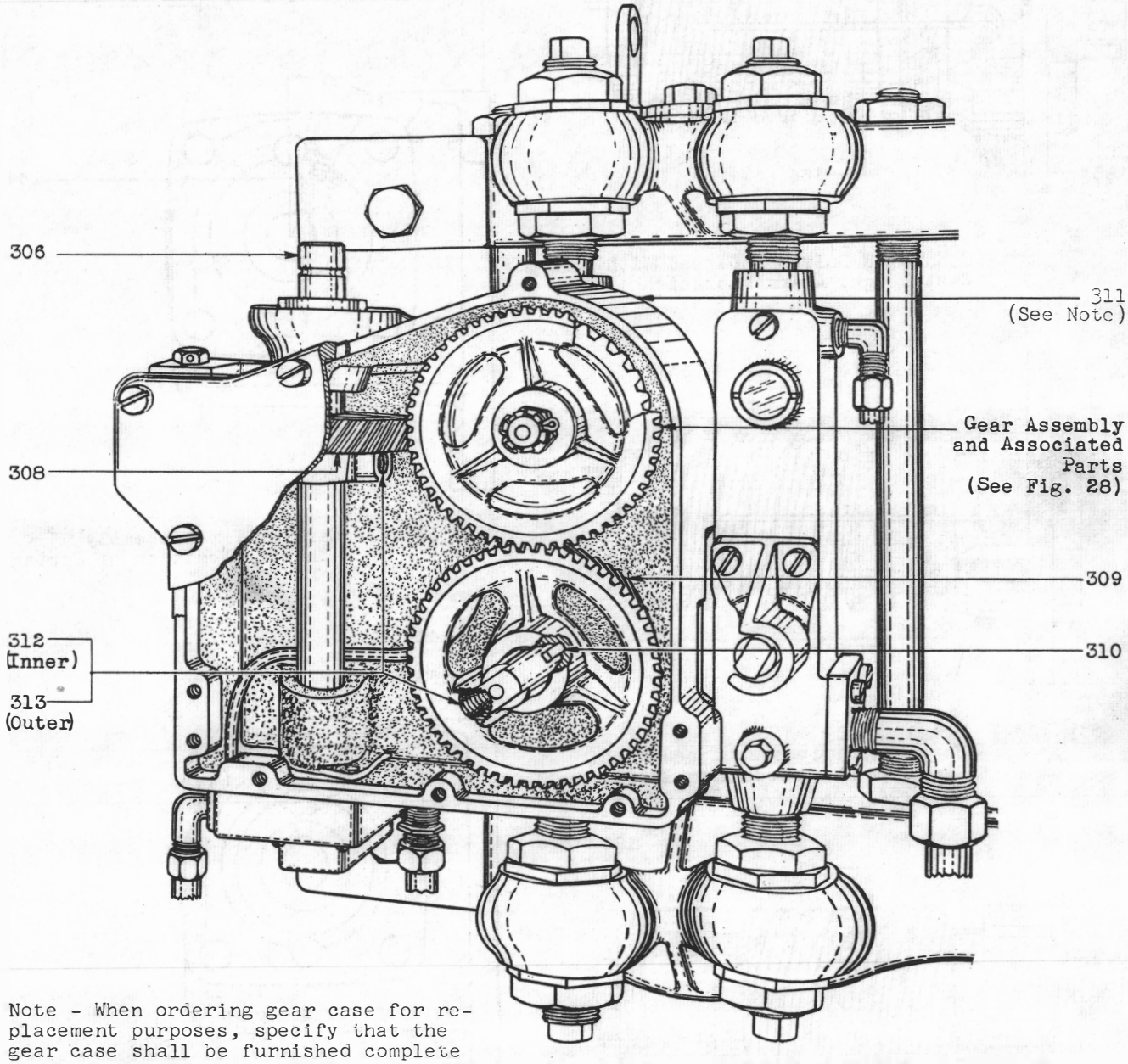


Note - When ordering gear case for replacement purposes, specify that the gear case shall be furnished complete with oil return pipe and plug.

Fig. 21 - Internal Parts - Gear Case
Non Worm End of Drives
(Nos. 3A, C, F, 18A, 20A,
23A, C, F and 26A Drives)

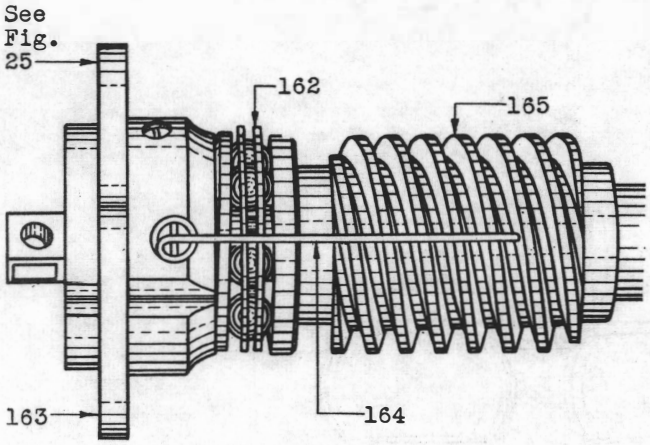


Fig. 22 - Worm Assembly
Used With Drives Equipped With
Cast Weight Alarm Mechanism

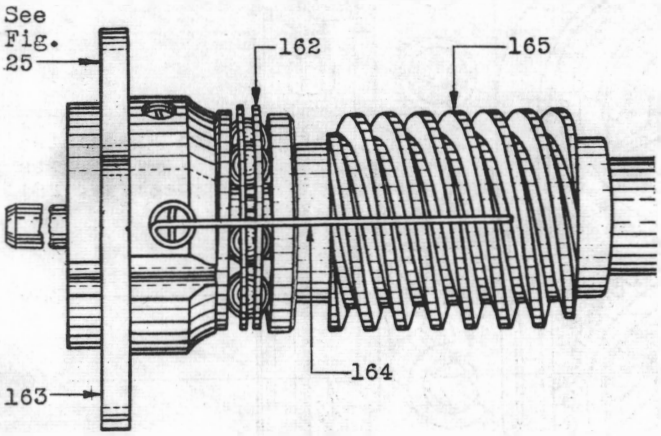


Fig. 23 - Worm Assembly
Used With Drives Equipped With
Link Type Alarm Mechanism (Except
Nos. 35A, 45A, 46A, 47A, 48A
and 49A Drives)

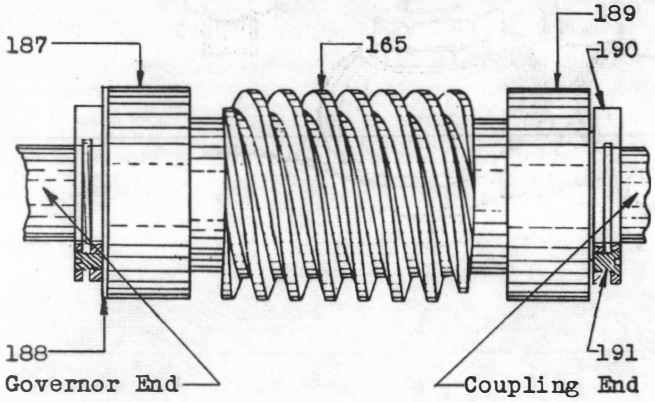


Fig. 24 - Worm Assembly
(Nos. 35A, 45A, 46A, 47A,
48A and 49A Drives)

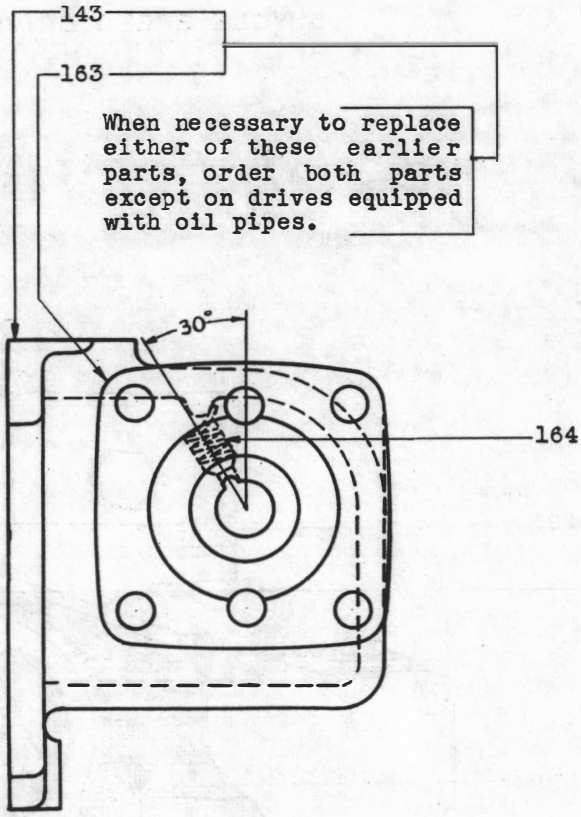


Fig. 25(a) - Earlier Type Assembly
Showing Position of Spring

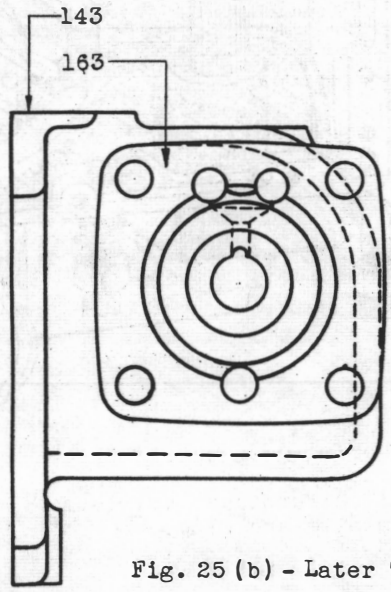


Fig. 25 (b) - Later Type Assembly

Fig. 25 - Worm Case Housing Assembly
and Housing Assembly

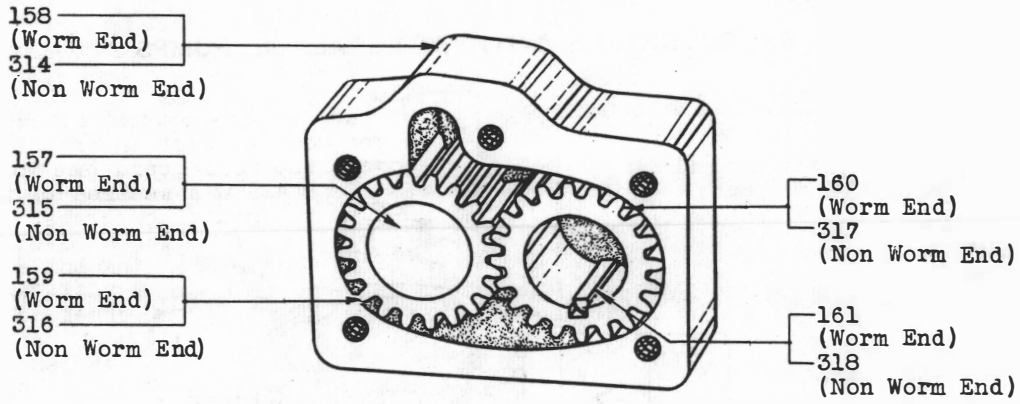


Fig. 26 - Oil Pump Assembly

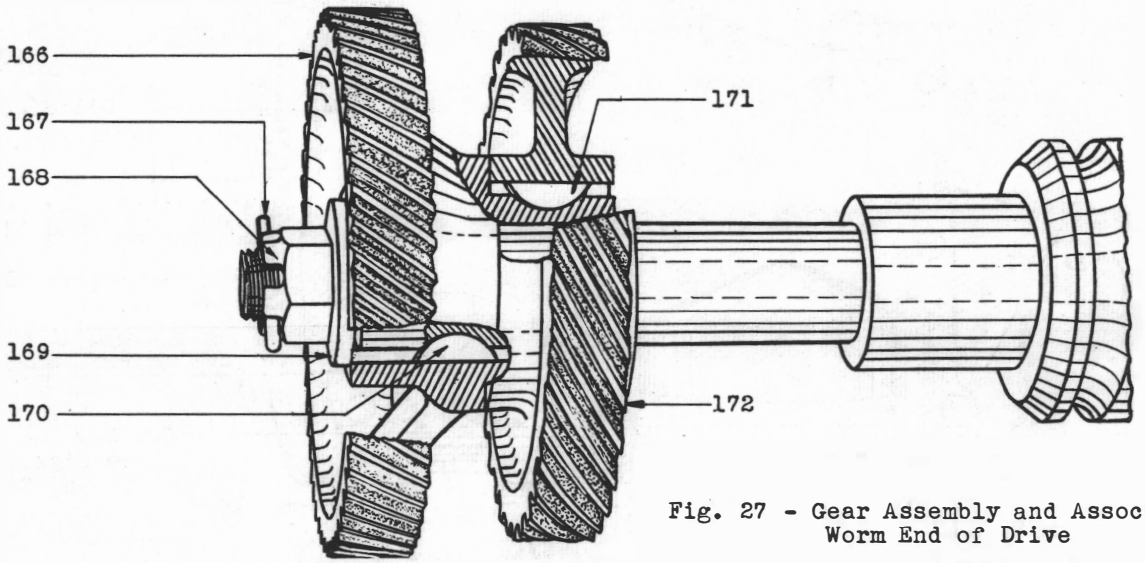


Fig. 27 - Gear Assembly and Associated Parts
Worm End of Drive

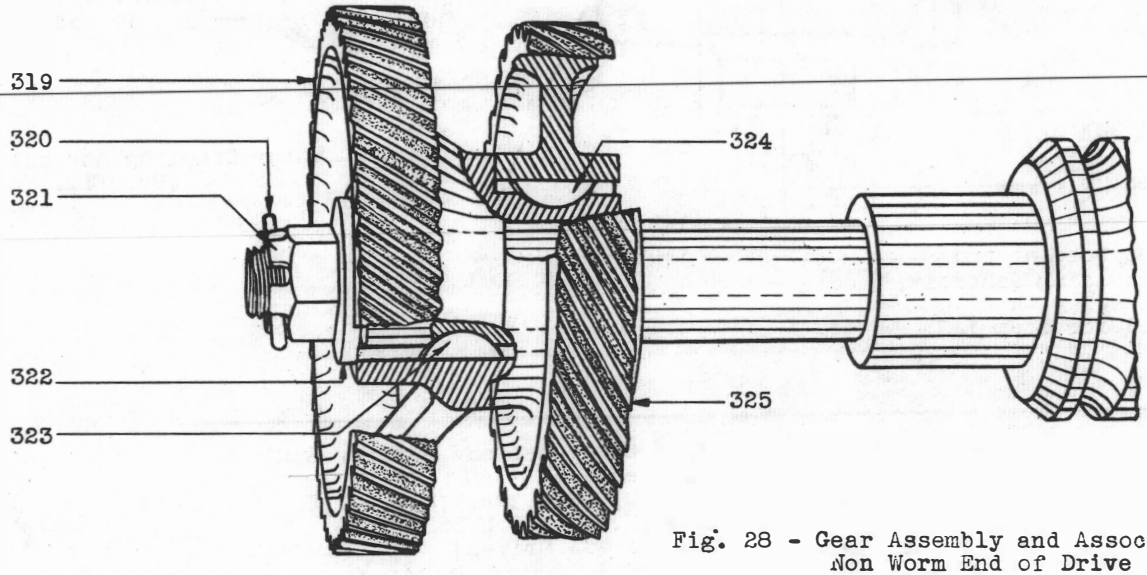


Fig. 28 - Gear Assembly and Associated Parts
Non Worm End of Drive

## SINGLE SPEED DRIVES WITH INTEGRAL OIL PUMPS

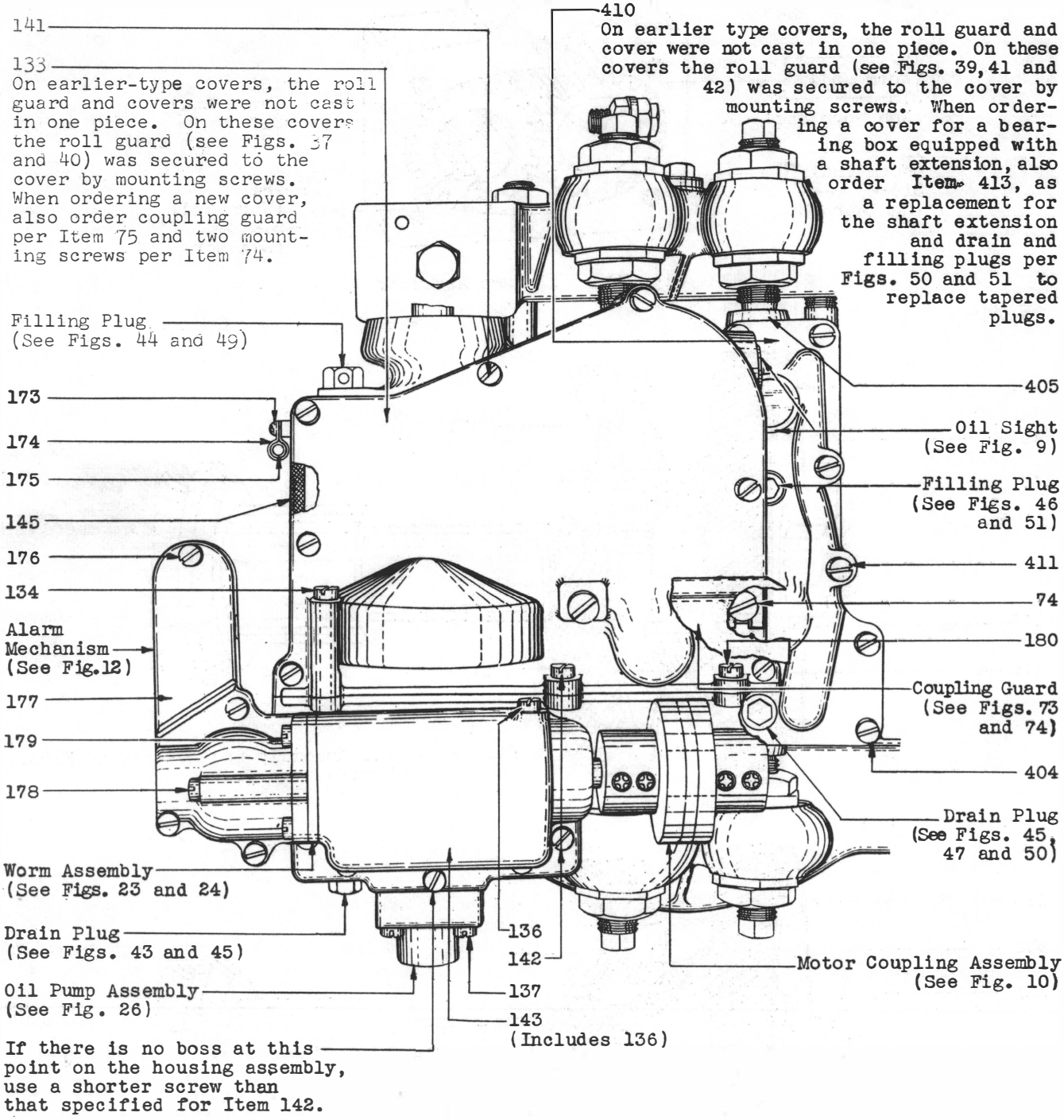


Fig. 29 - External Parts - Gear Case and Bearing Box
Worm End of Drives
(Nos. 17B,E,18C,D,G,H,J,19B,E,20C,D,G,H,
21E,F,G,H,R,23G,H,J,K,L,T,U,25B,E,
26C,D,G,H,35A and 49A Drives)

## SINGLE SPEED DRIVES WITH INTEGRAL OIL PUMPS

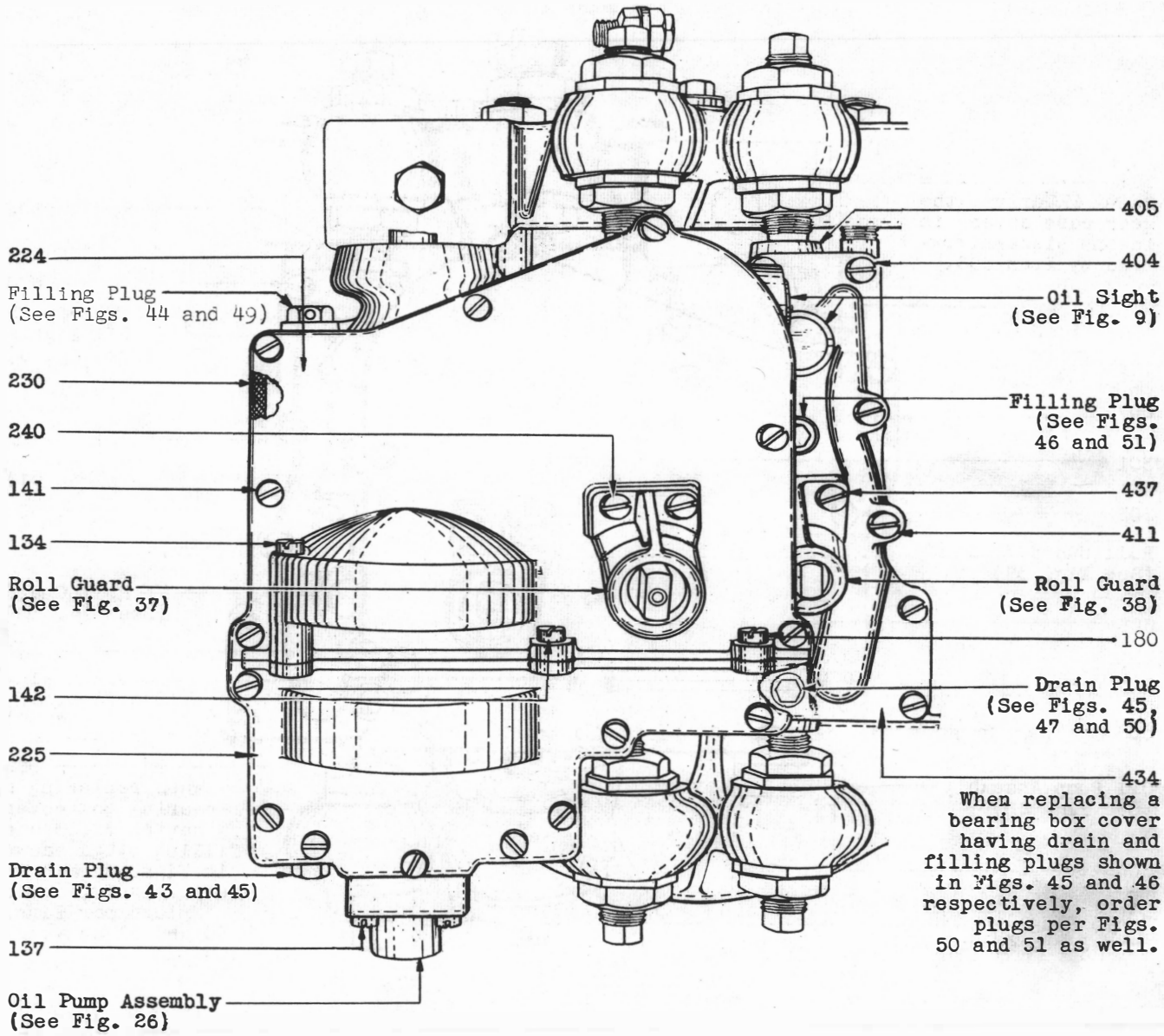


Fig. 30 - External Parts - Gear Case and Bearing Box
Non Worm End of Converted Drives
(Nos. 18D, J, 20D, H, 23H, K, U, 26D and H Drives)

## SINGLE SPEED DRIVES WITH INTEGRAL OIL PUMPS

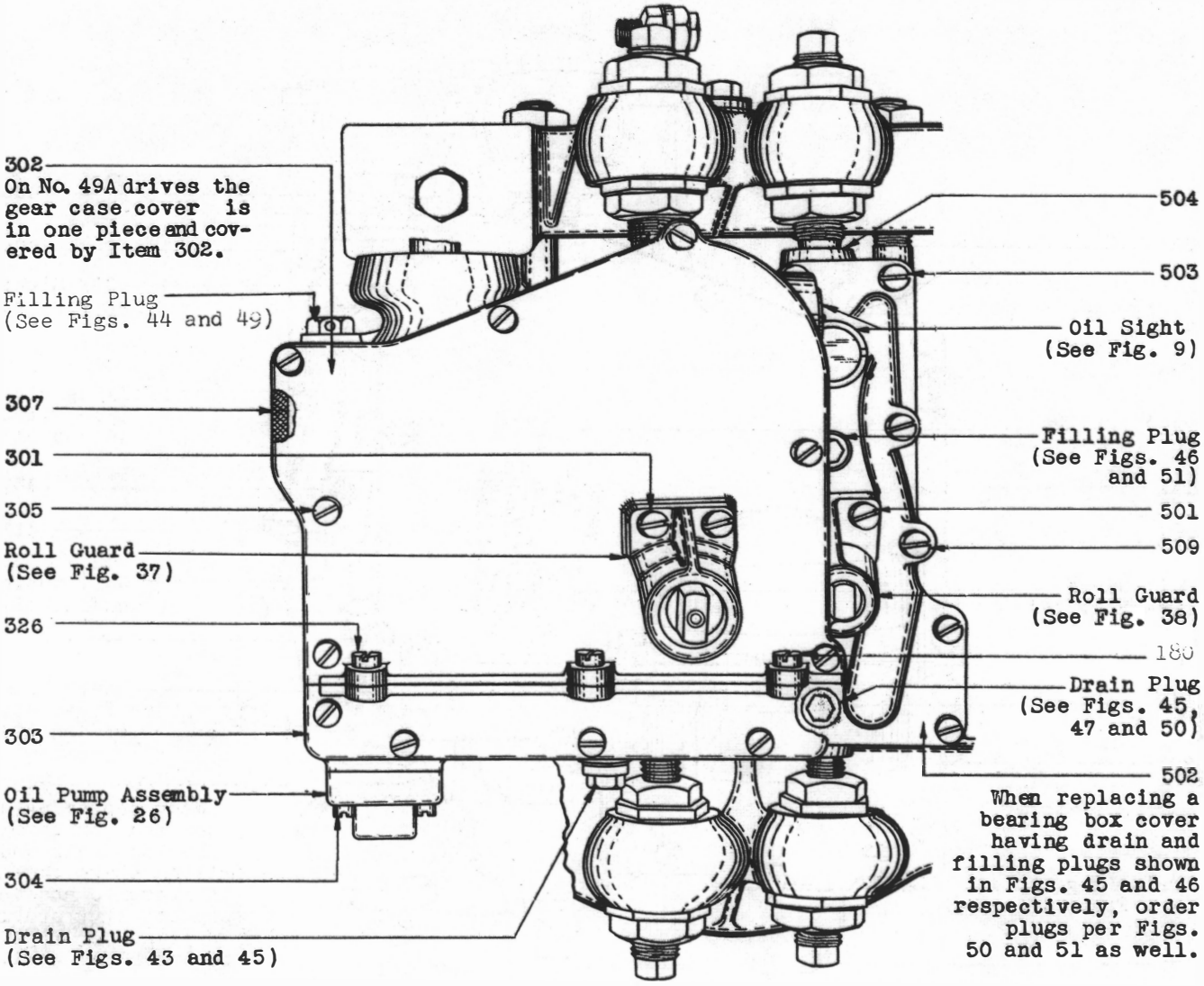


Fig. 31 - External Parts - Gear Case and Bearing Box
Non Worm End of Drives
(Nos. 18C,G,H,20C,G,23G,J,L,T,
26C,G, and 49A Drives)

## SINGLE SPEED DRIVES WITH INTEGRAL OIL PUMPS

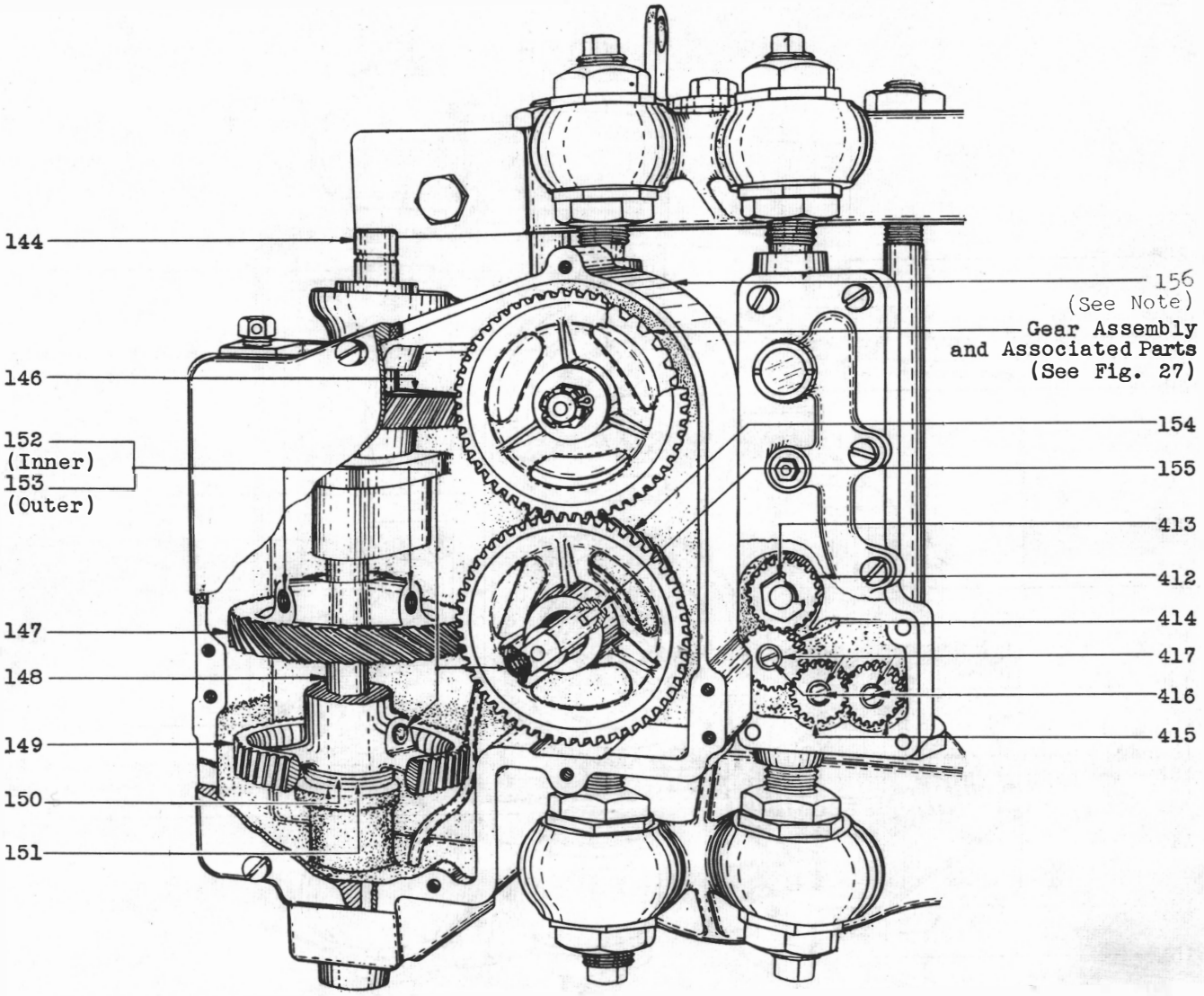


Note - When ordering gear case for replacement purposes, specify that the gear case shall be furnished complete with oil return pipe and plug.

Fig. 32 - Internal Parts - Gear Case and Bearing Box Worm End of Drives (Nos. 17B, E, 18C, D, G, H, J, 19B, E, 20C, D, G, H, 21E, F, G, H, R, 23G, H, J, K, L, T, U, 25B, E, 26C, D, G and H Drives)

## SINGLE SPEED DRIVES WITH INTEGRAL OIL PUMPS

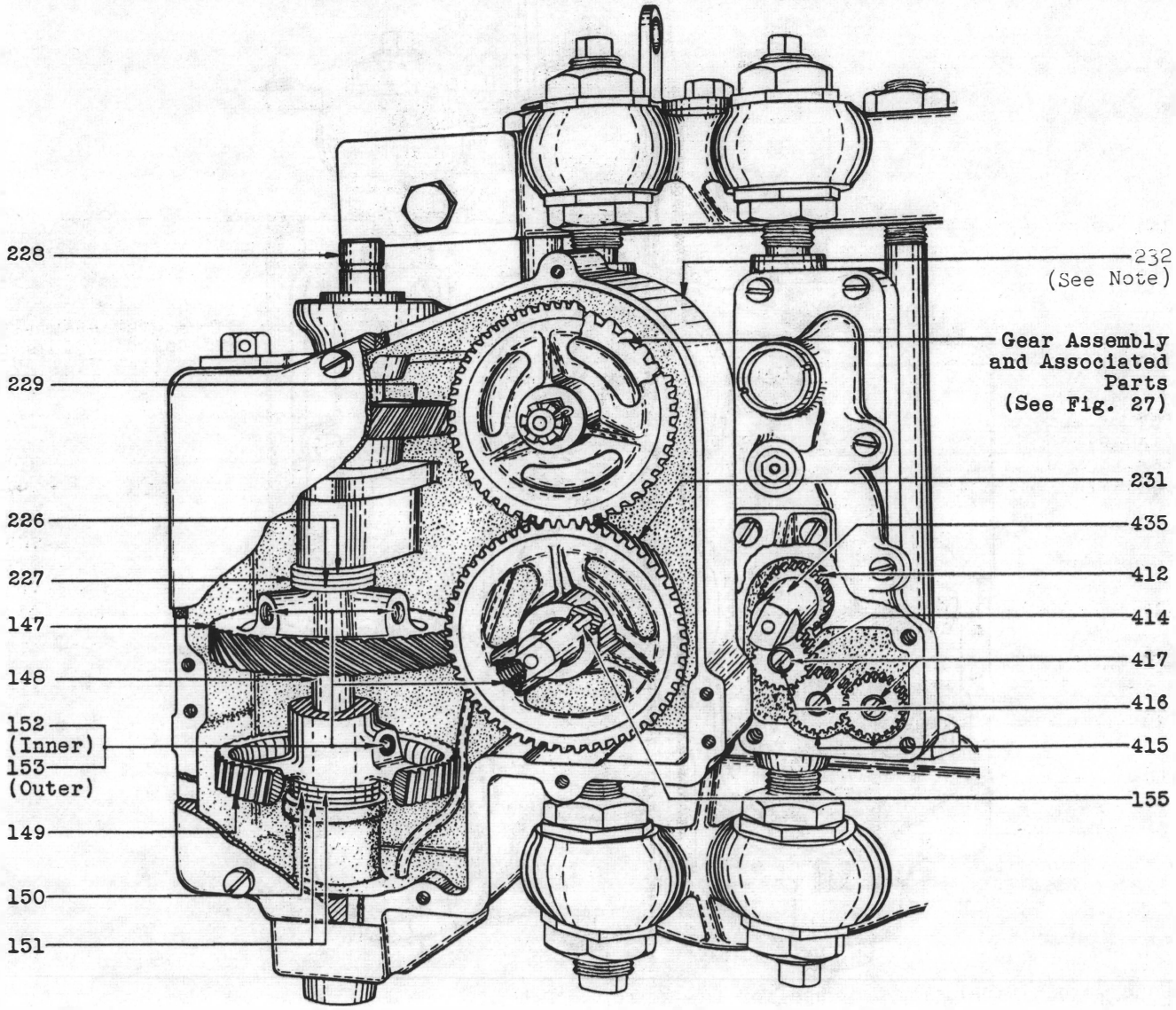


Note - When ordering gear case for replacement purposes, specify that the gear case shall be furnished complete with oil return pipe and plug.

**Fig. 33 - Internal Parts - Gear Case and Bearing Box Non Worm End of Converted Drives (Nos. 18D, J, 20D, H, 23H, K, U, 26D and H Drives)**

## SINGLE SPEED DRIVES WITH INTEGRAL OIL PUMPS

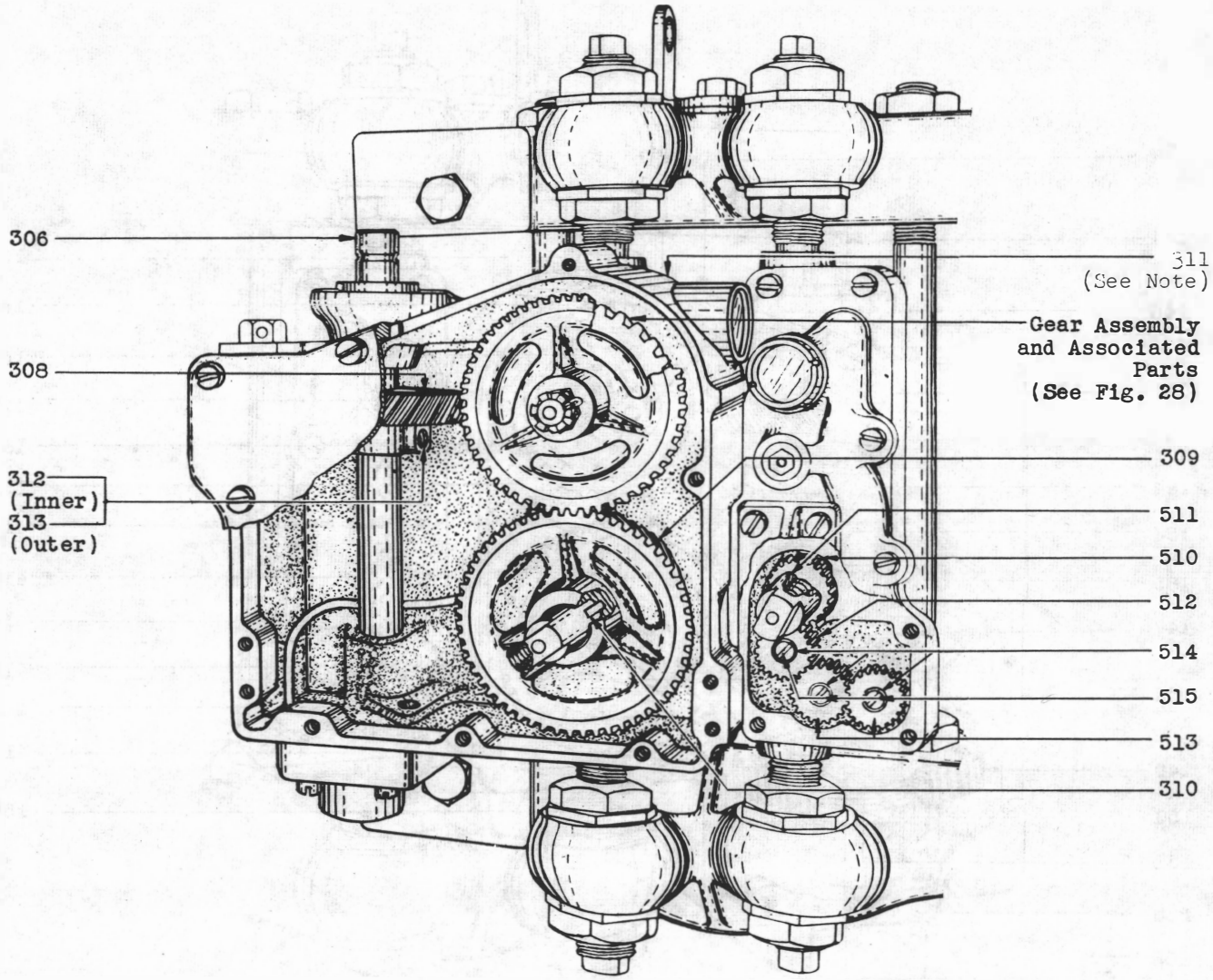


Note - When ordering gear case for replacement purposes, specify that the gear case shall be furnished complete with oil return pipe and plug.

**Fig. 34 - Internal Parts - Gear Case and Bearing Box Non Worm End of Drives (Nos. 18C, G, H, 20C, G, 23G, J, L, T, 26C and G Drives)**

## SINGLE SPEED DRIVES WITH INTEGRAL OIL PUMPS

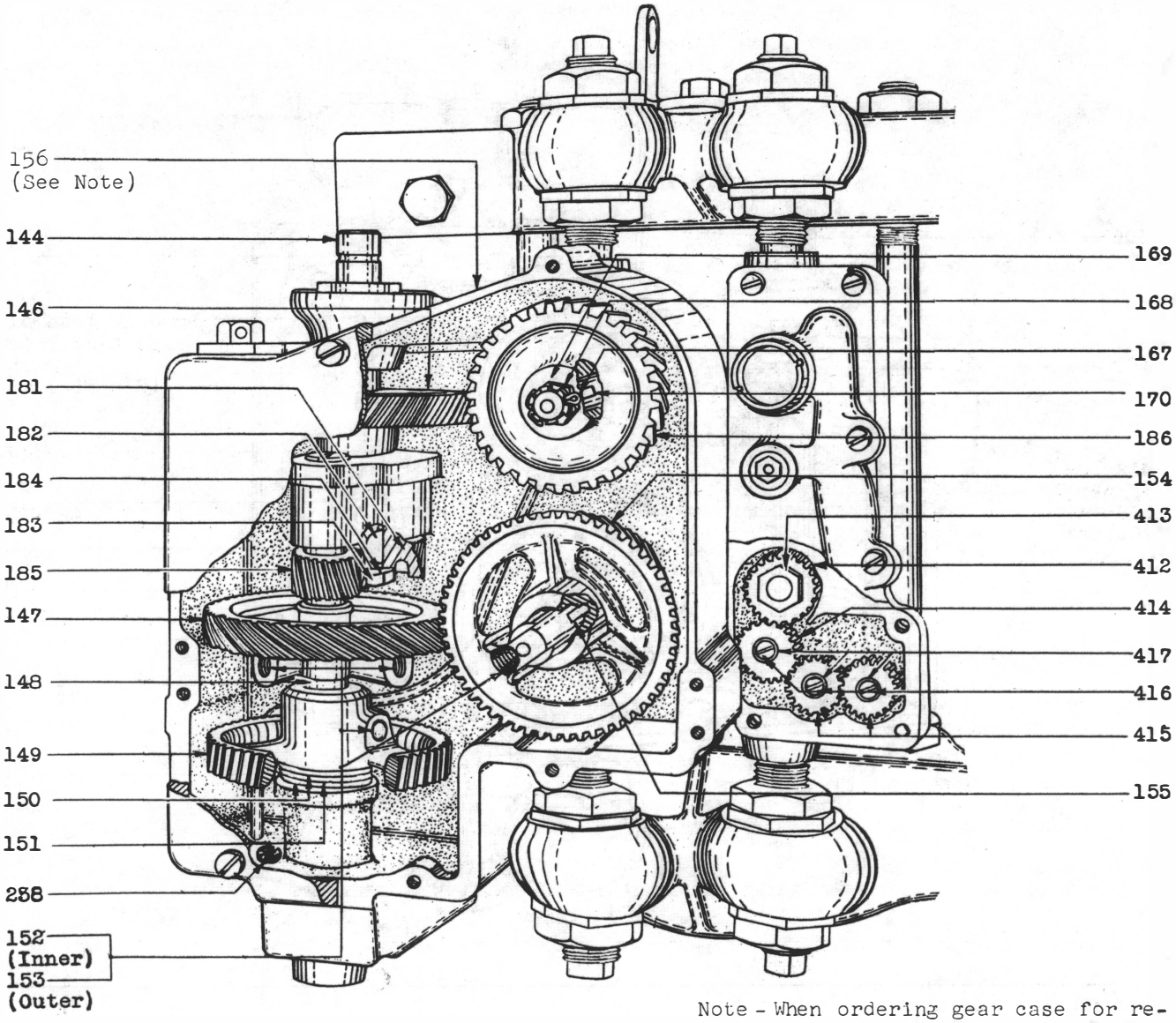


Note - When ordering gear case for replacement purposes, specify that the gear case shall be furnished complete with oil return pipe and plug.

**Fig. 35 - Internal Parts - Gear Case and Bearing Box Worm End of Drives (Nos. 35A and 49A Drives)**

## SINGLE SPEED DRIVES WITH INTEGRAL OIL PUMPS

Note - When ordering gear case for replacement purposes, specify that the gear case shall be furnished complete with oil return pipe and plug.

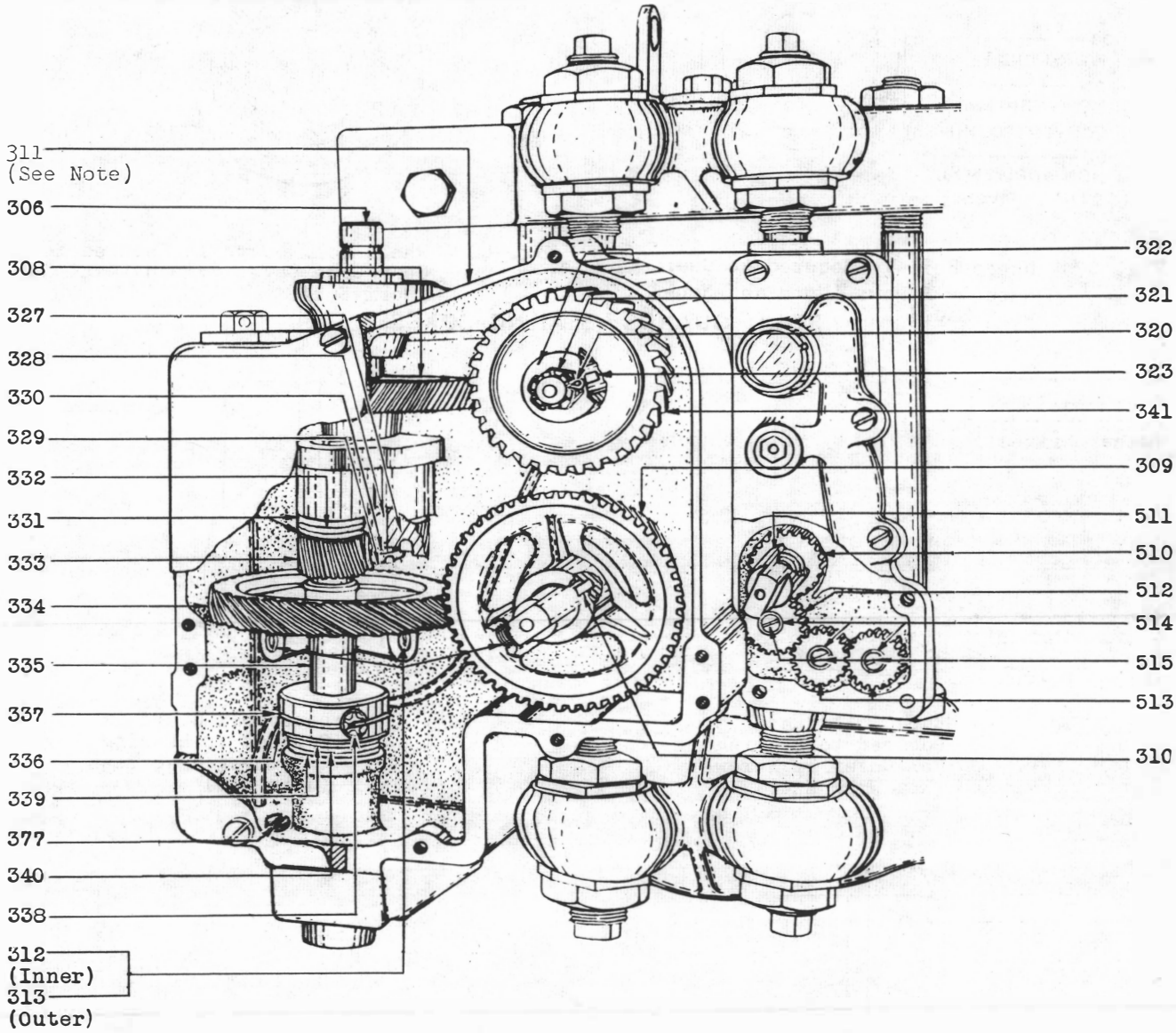


Fig. 36 - Internal Parts - Gear Case and Bearing Box
Non Worm End of Drives
(No. 49A Drive)

## ROLL GUARDS - GEAR CASES

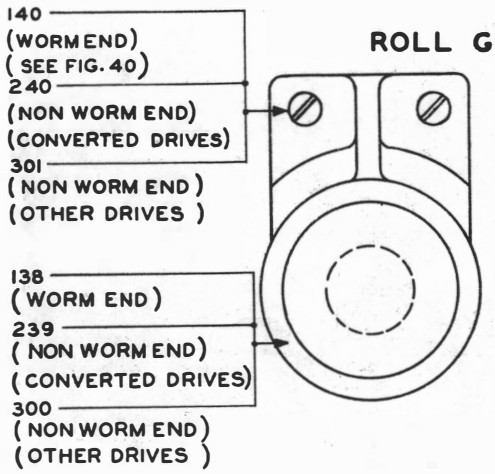


Fig. 37 - Where Roll Is Secured to Gear Case by Screws (Worm and Non-worm Ends)

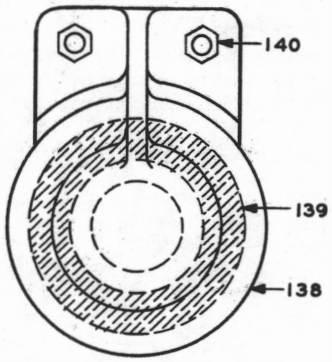


Fig. 40 - Where Roll Guard Is Secured to Gear Case Cover by Studs and Nuts (Worm End)

## ROLL GUARDS - BEARING BOXES

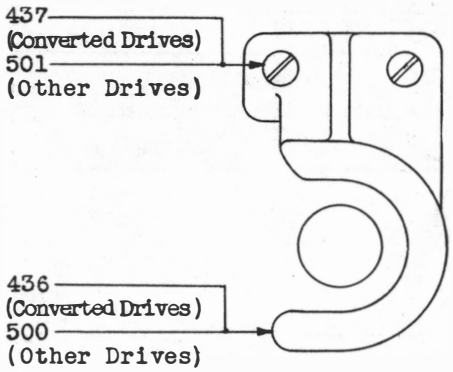


Fig. 38 - Where Roll Guard is Secured to Bearing Box Cover by Screws (Non Worm End)

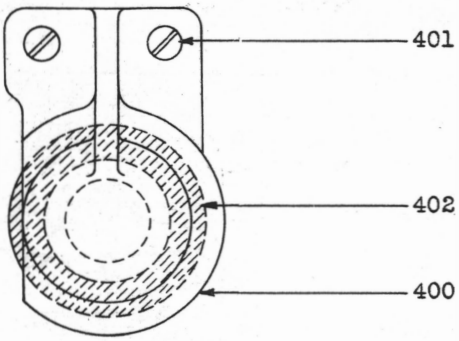


Fig. 41 - Where Roll Guard is Secured to Bearing Box Cover by Screws (Worm End)

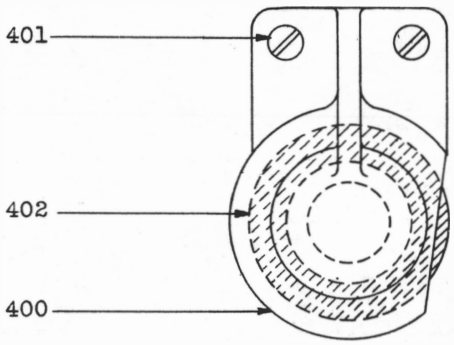


Fig. 39 - Where Roll Guard is Secured to Bearing Box Cover by Screws (Worm End)

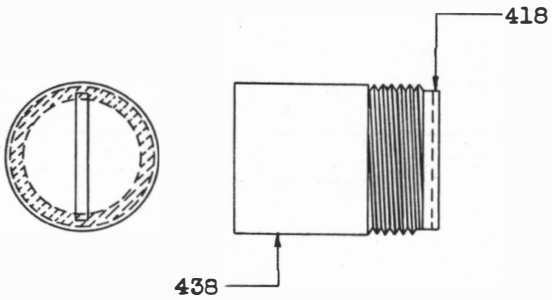


Fig. 42 - Where Roll Guard is Secured to Bearing Box Cover by Threads (Worm End)

## DRAIN AND FILLING PLUGS - GEAR CASES

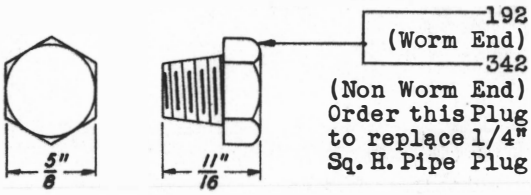


Fig. 43 - Drain Plug - Hex. H. Pipe Plug
Used Where Gear Case is
Tapped For Pipe Plugs
(Formerly Used as Filling Plug)

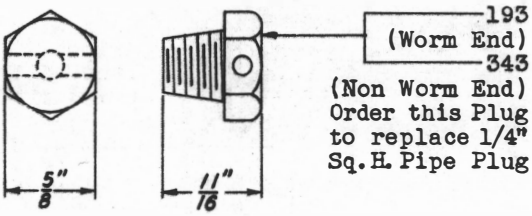


Fig. 44 - Filling Plug - Hex. H. Pipe Plug
(Vented Plug)
Used Where Gear Case is
Tapped For Pipe Plugs

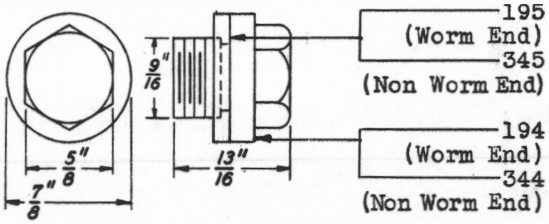


Fig. 48 - Drain Plug - Collar H. Plug
Used Where Gear Case is Tapped
For Straight Thread Plugs
(Formerly Used as Filling Plug)

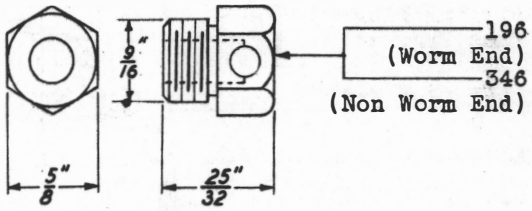


Fig. 49 - Filling Plug - Collar H. Plug
(Vented Plug)
Used Where Gear Case is Tapped
For Straight Thread Plugs

## DRAIN AND FILLING PLUGS - BEARING BOXES

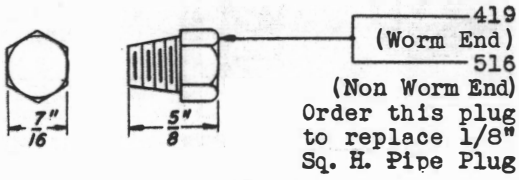


Fig. 45 - Drain Plug - Hex. H. Pipe Plug
Used Where Bearing Box is
Tapped For Pipe Plugs
(Formerly Used as Filling Plug)

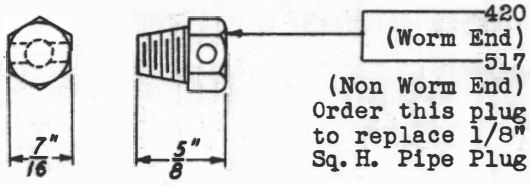


Fig. 46 - Filling Plug - Hex. H. Pipe Plug
(Vented Plug)
Used Where Bearing Box is
Tapped For Pipe Plugs

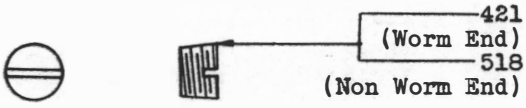


Fig. 47 - Drain Plug - Slotted Head
Used Where Bearing Box Cover is
Tapped For Pipe Plugs and There
is Insufficient Space For Hex. Wrench

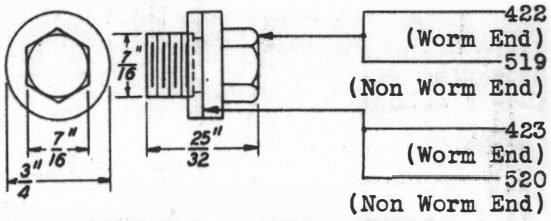


Fig. 50 - Drain Plug - Collar H Plug
Used Where Bearing Box is Tapped
For Straight Thread Plugs
(Formerly Used as Filling Plug)

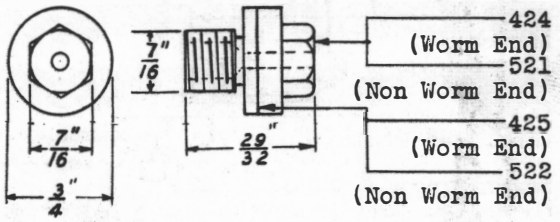


Fig. 51 - Filling Plug - Collar H. Plug
(Vented Plug)
Used Where Bearing Box is Tapped
For Straight Thread Plugs

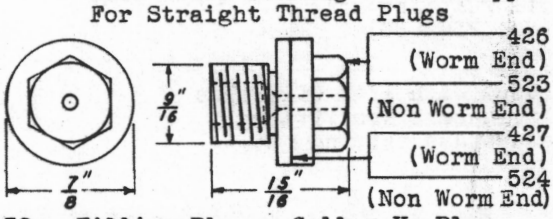


Fig. 52 - Filling Plug - Collar H. Plug
(Vented Plug)
(Nos. 45, 46, 47 and 48 Type Drives)

## DOUBLE SPEED DRIVES WITH EXTERNAL OIL PIPES

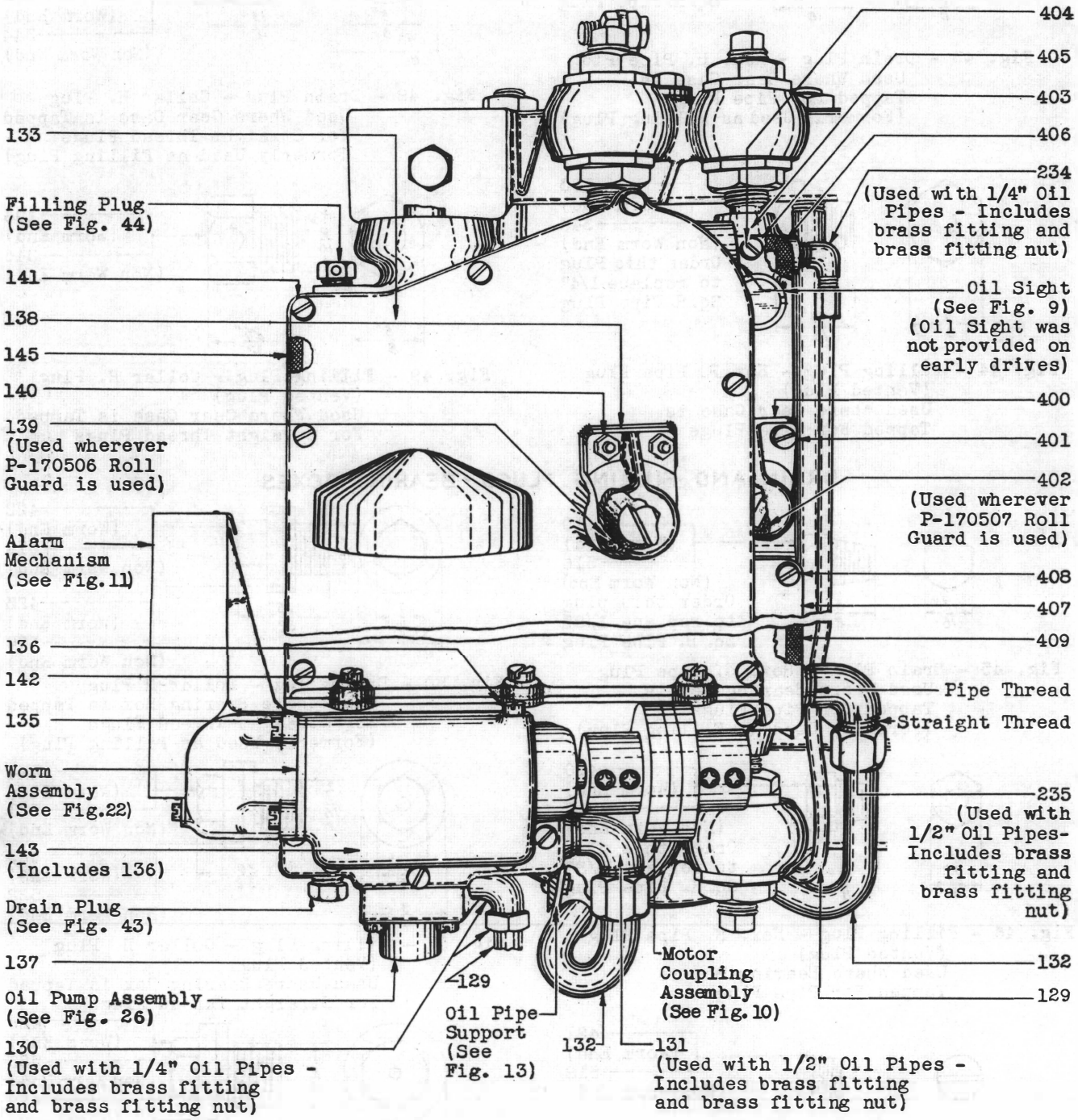


Fig. 53 - External Parts - Gear Case and Bearing Box Worm End of Drives (Nos. 2A, 4A, 4B, 22A, 22B, 24A, 24B, 24C, and 24D Drives)

## DOUBLE SPEED DRIVES WITH EXTERNAL OIL PIPES

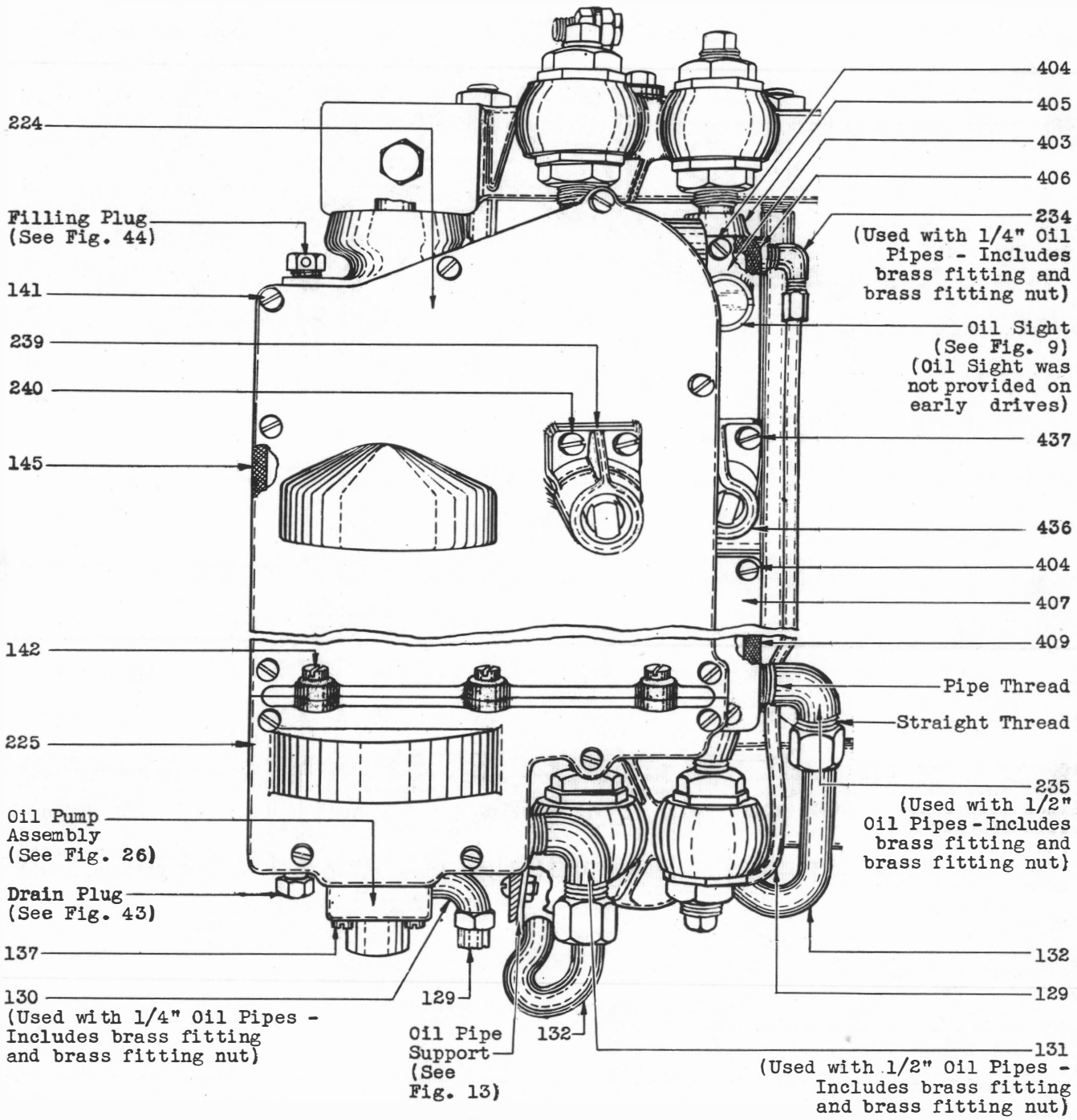


Fig. 54 - External Parts - Gear Case and Bearing Box
Non Worm End of Converted Drives
(Nos. 4B, 24B and D Drives)

## DOUBLE SPEED DRIVES WITH EXTERNAL OIL PIPES

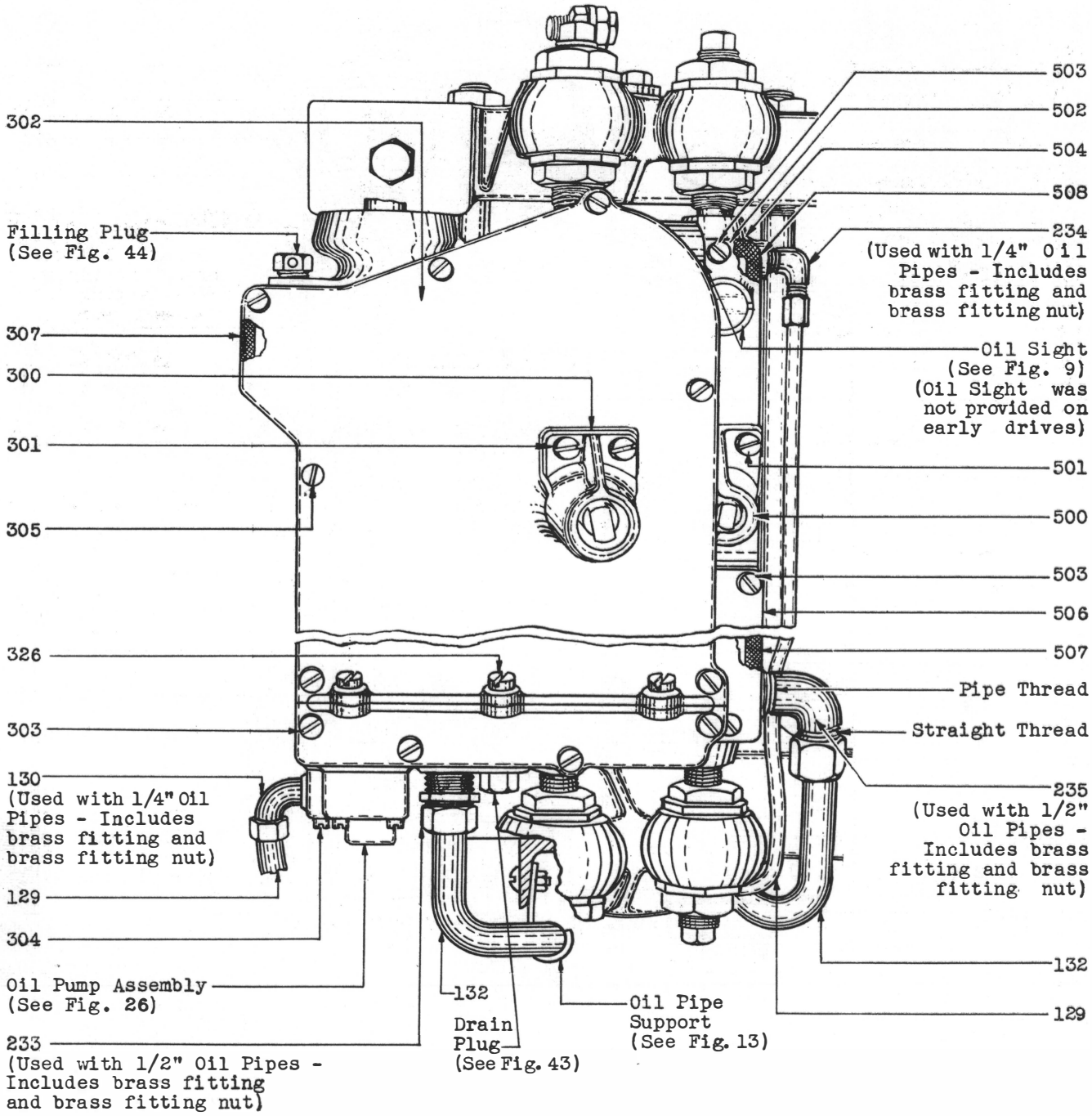


Fig. 55 - External Parts - Gear Case and Bearing Box
Non Worm End of Drives
(Nos. 4A, 24A and C Drives)

## DOUBLE SPEED DRIVES WITH EXTERNAL OIL PIPES

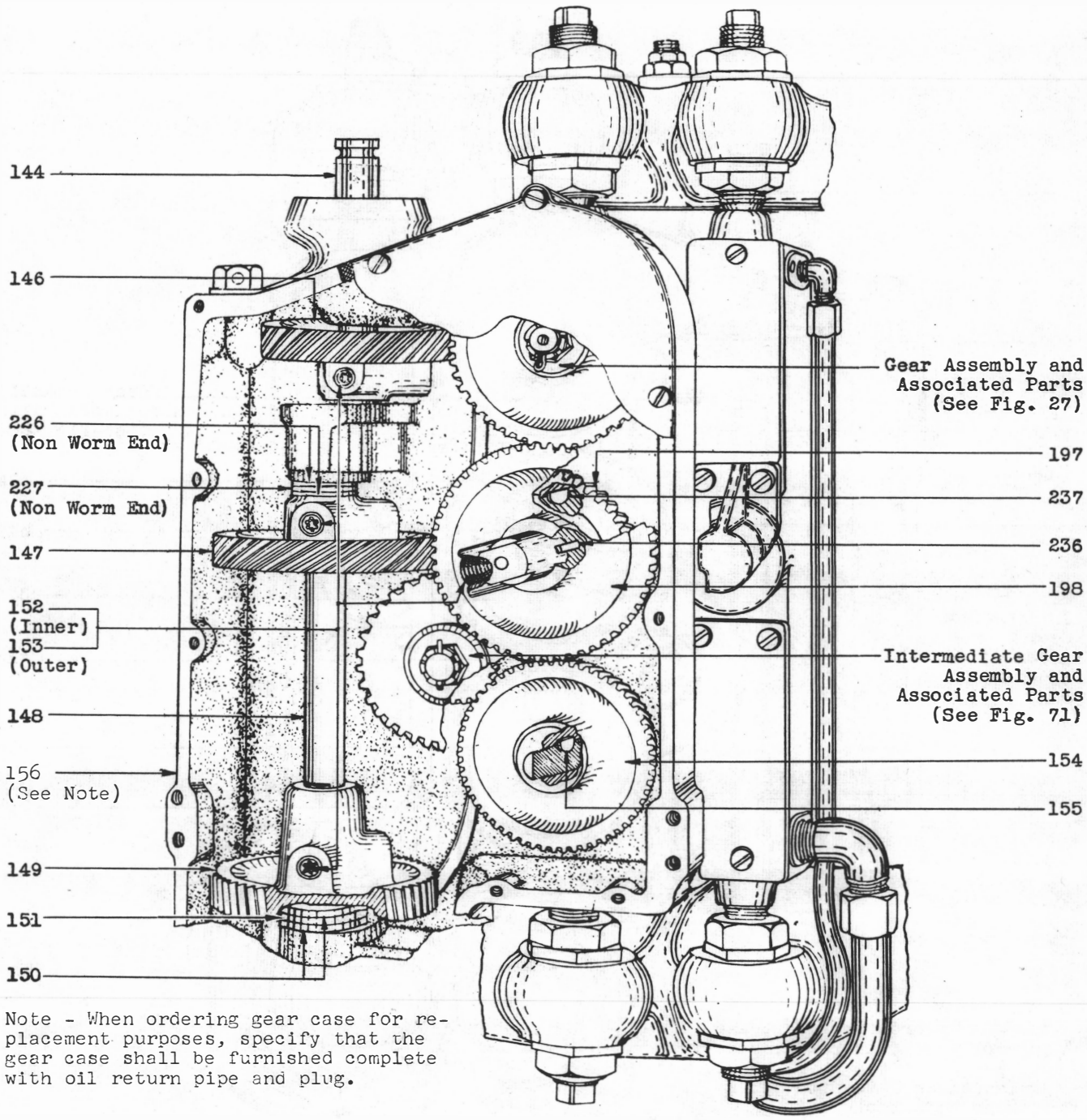


Note - When ordering gear case for replacement purposes, specify that the gear case shall be furnished complete with oil return pipe and plug.

Fig. 56 - Internal Parts - Gear Case
Worm End of Drives
(Nos.2A,4A,B,22A,B,24A,B,C and D Drives)
Non Worm End of Converted Drives
(Nos. 4B, 24B and D Drives)

## DOUBLE SPEED DRIVES WITH EXTERNAL OIL PIPES

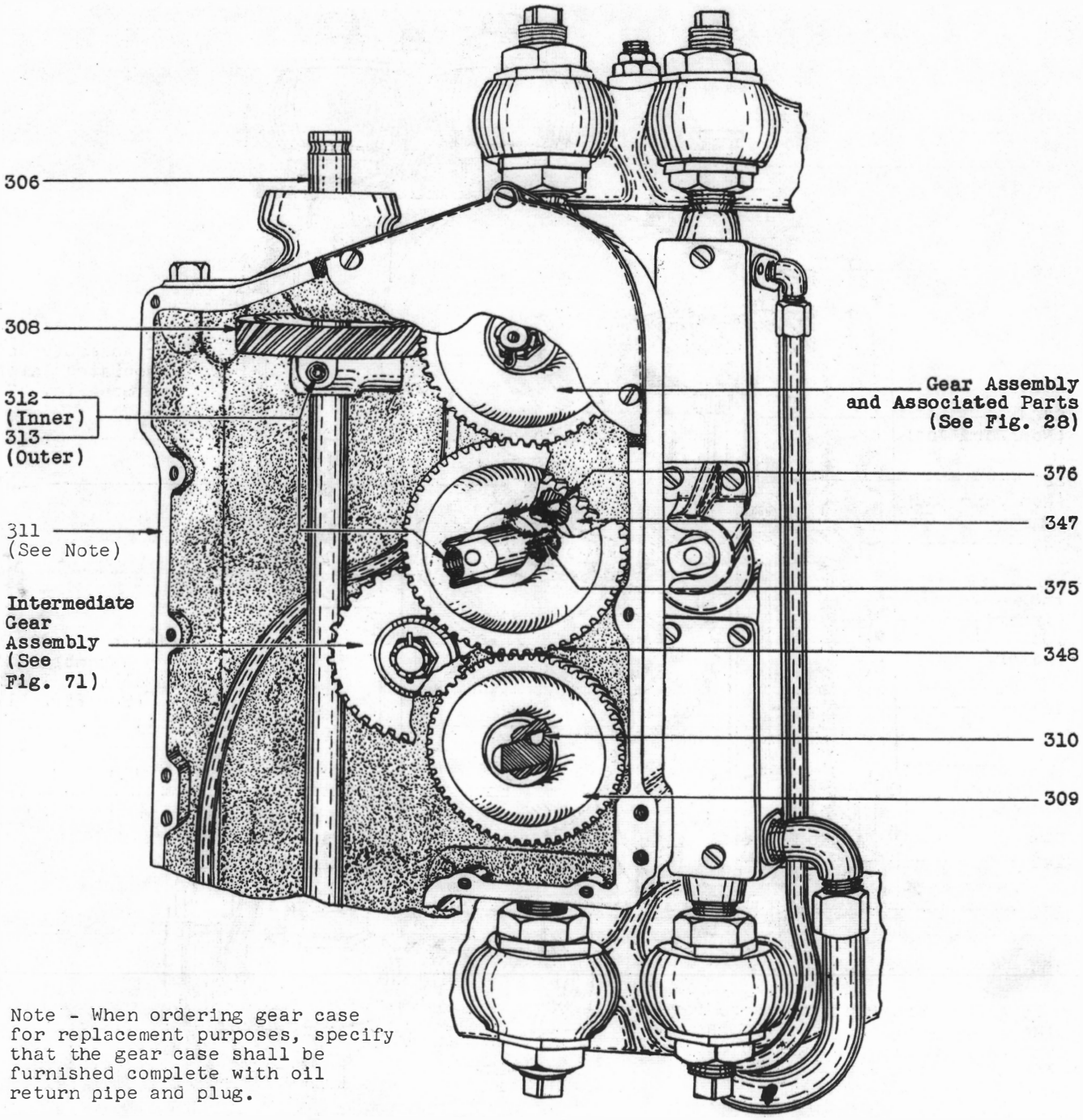


Note - When ordering gear case for replacement purposes, specify that the gear case shall be furnished complete with oil return pipe and plug.

**Fig. 57 - Internal Parts - Gear Case Non Worm End of Drives (Nos. 4A, 24A and C Drives)**

## DOUBLE SPEED DRIVES WITH INTEGRAL OIL PUMPS

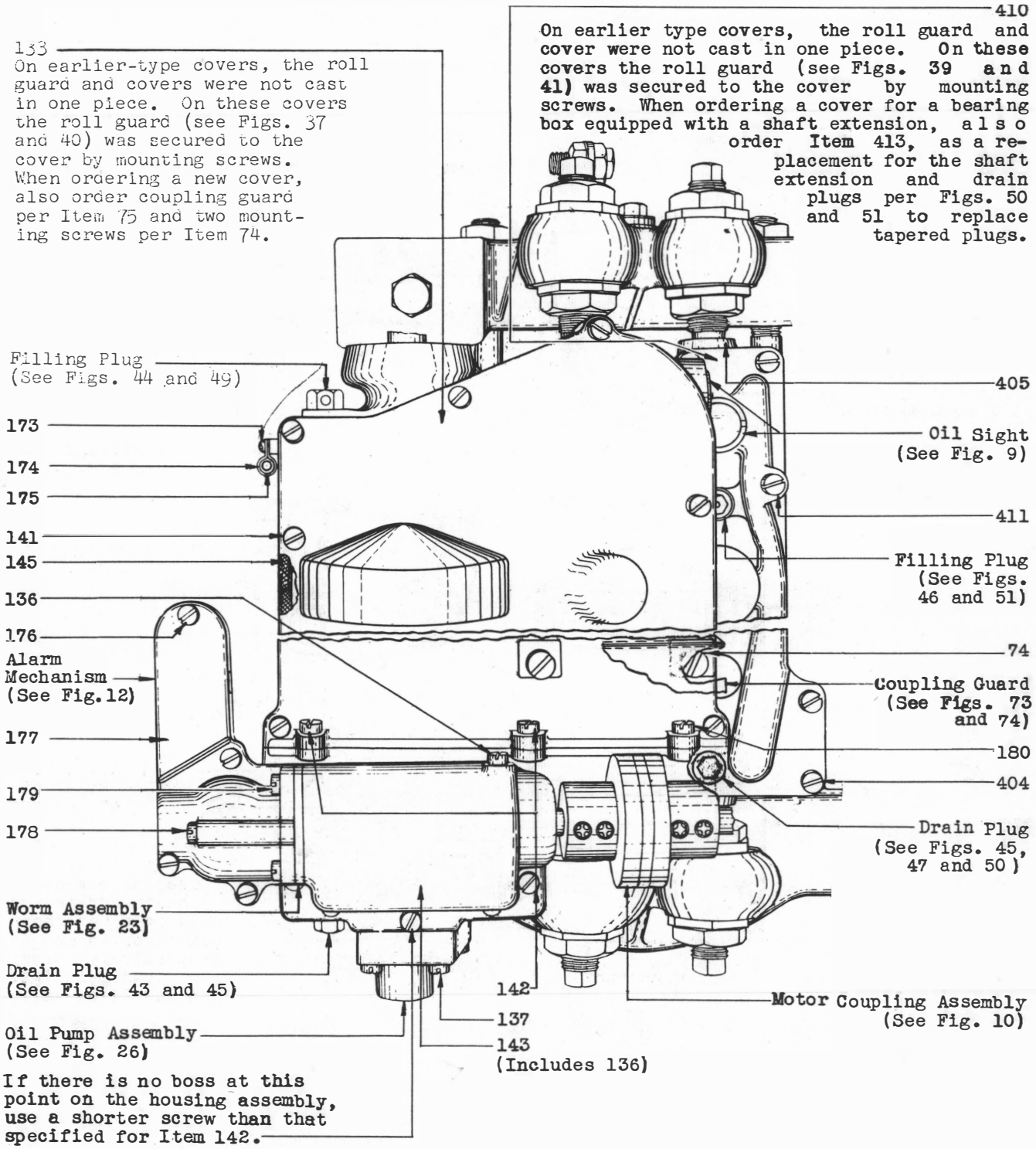


Fig. 58 - External Parts - Gear Case and Bearing Box
Worm End of Drive
(Nos. 22C, 24E and F Drives)

## DOUBLE SPEED DRIVES WITH INTEGRAL OIL PUMPS

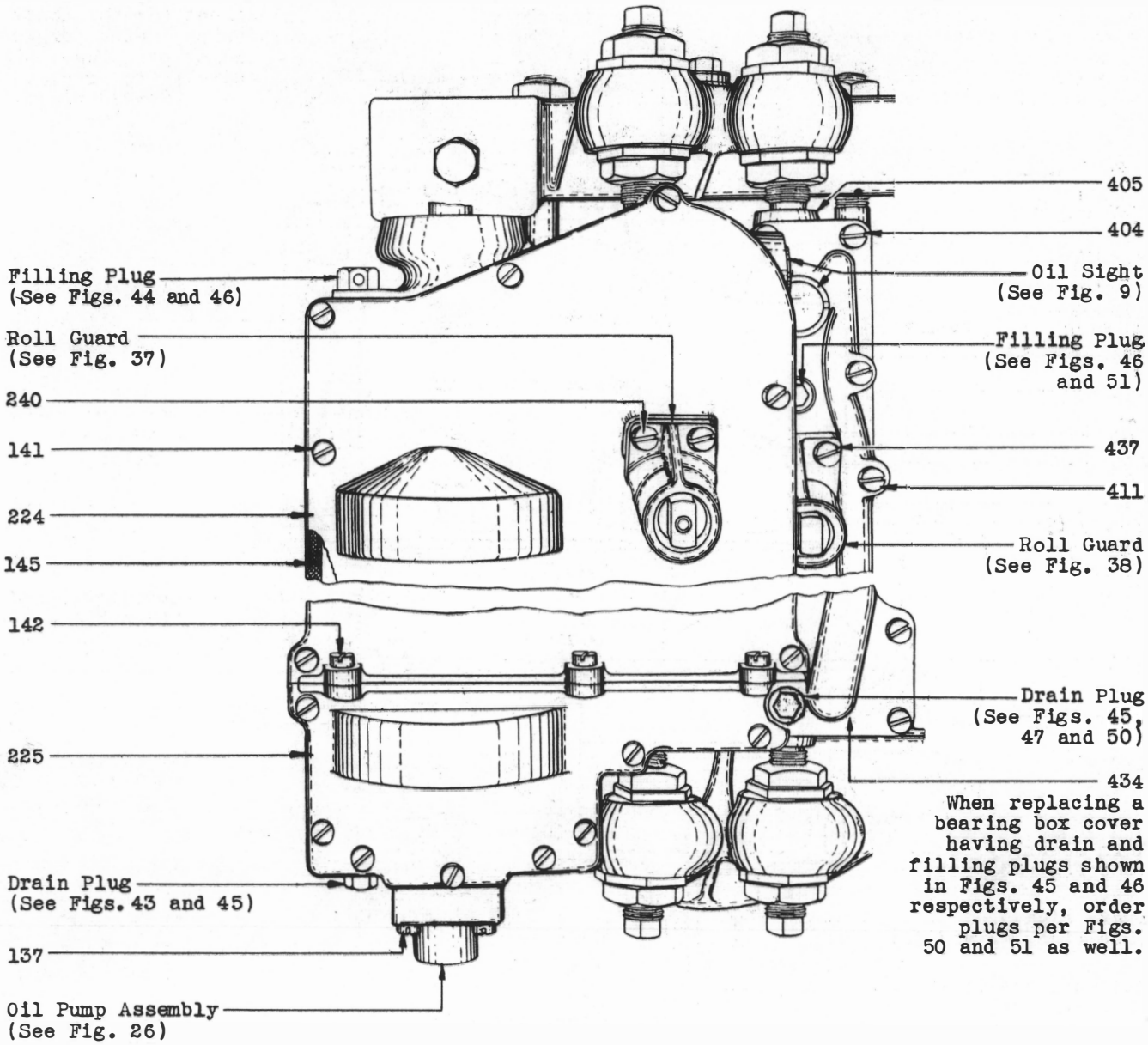


Fig. 59 - External Parts - Gear Case and Bearing Box
Non Worm End of Converted Drives
(No. 24F Drive)

## DOUBLE SPEED DRIVES WITH INTEGRAL OIL PUMPS

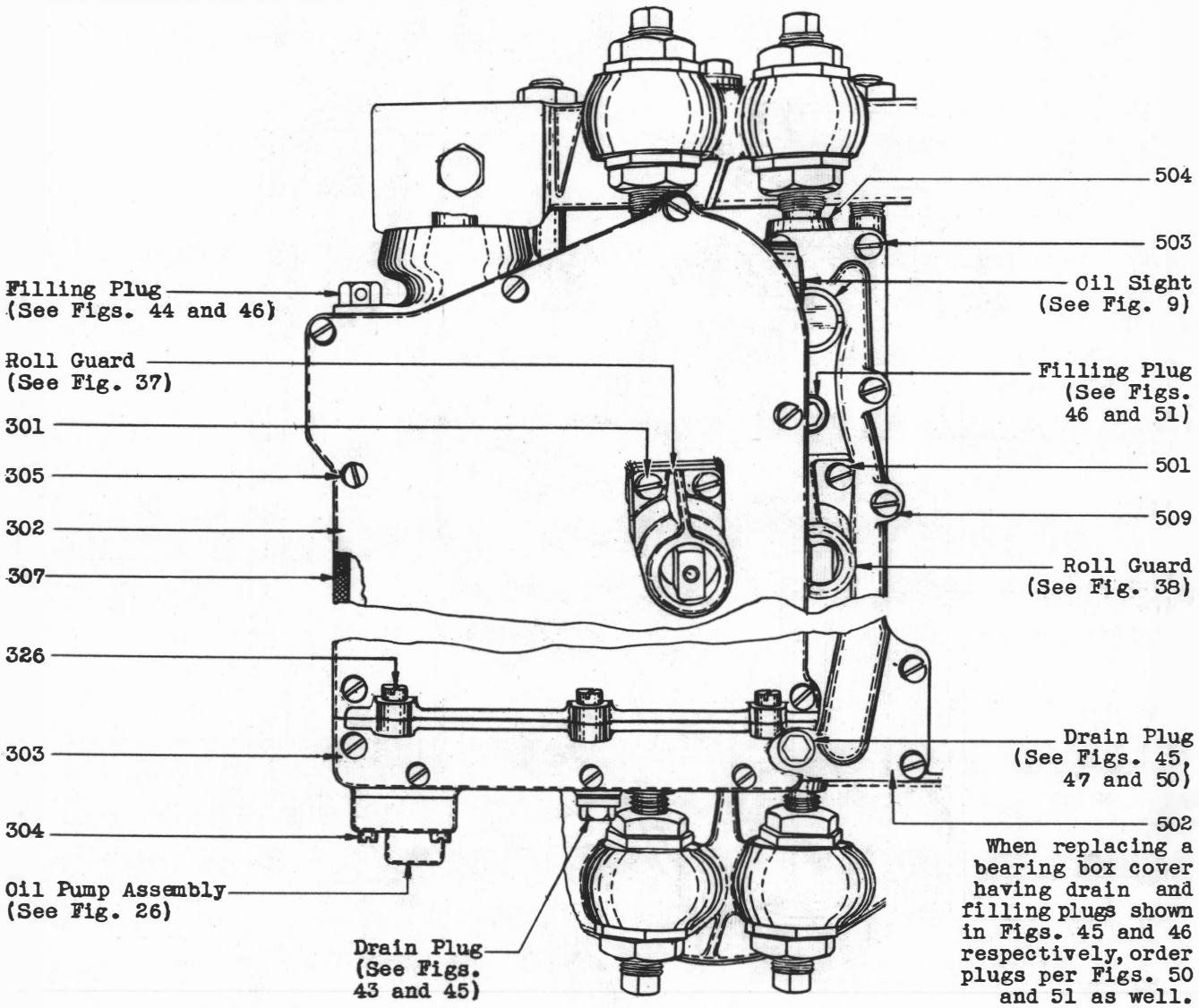


Fig. 60 - External Parts - Gear Case and Bearing Box
Non Worm End of Drive
(No. 24E Drive)

## DOUBLE SPEED DRIVES WITH INTEGRAL OIL PUMPS

Note - When ordering gear case for replacement purposes, specify that the gear case shall be furnished complete with oil return pipe and plug.

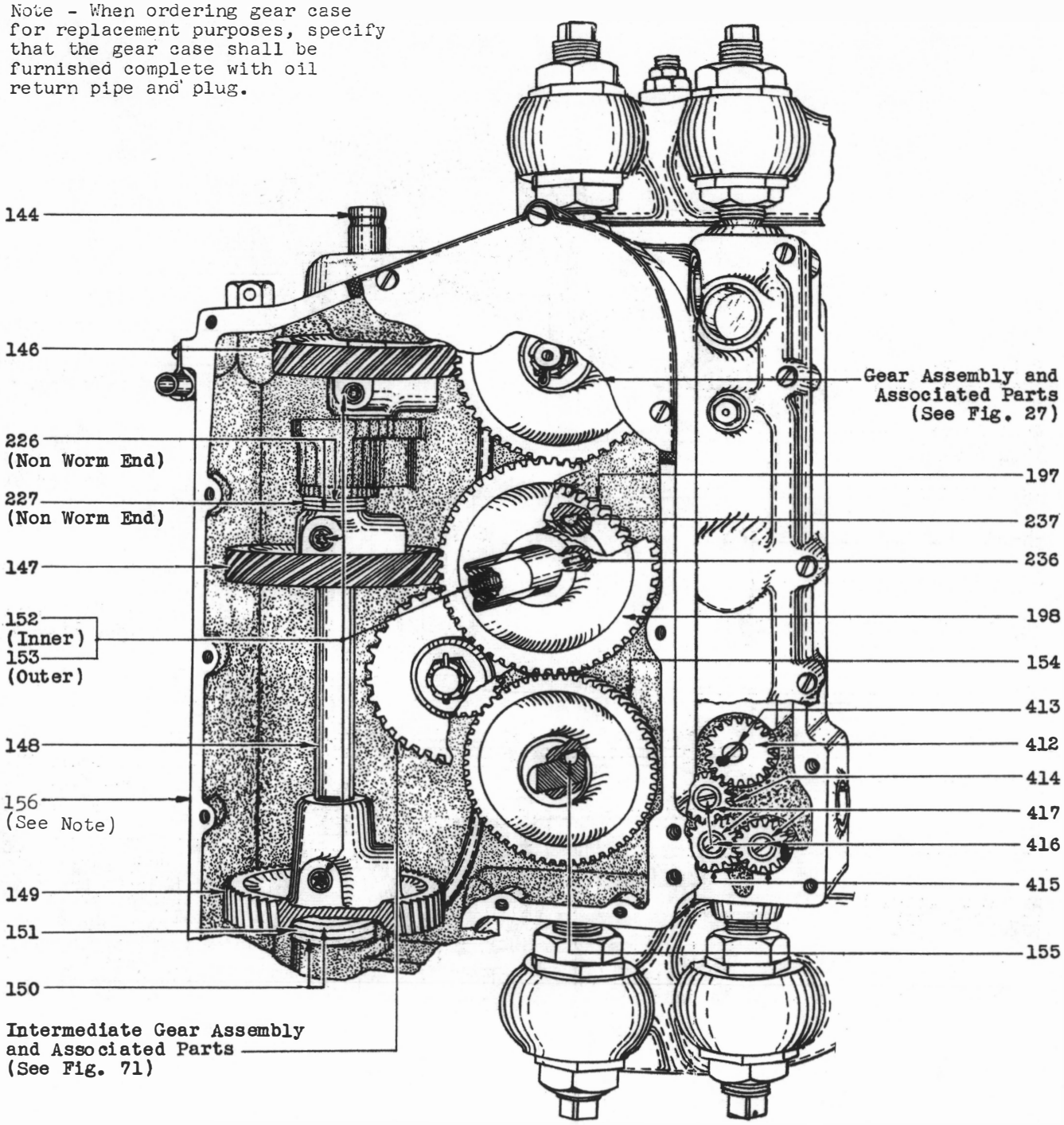


Fig. 61 - Internal Parts - Gear Case and Bearing Box
Worm End of Drives
(Nos. 22C, 24E and F Drives)
Non Worm End of Converted Drive
(No. 24F Drive)

## DOUBLE SPEED DRIVES WITH INTEGRAL OIL PUMPS

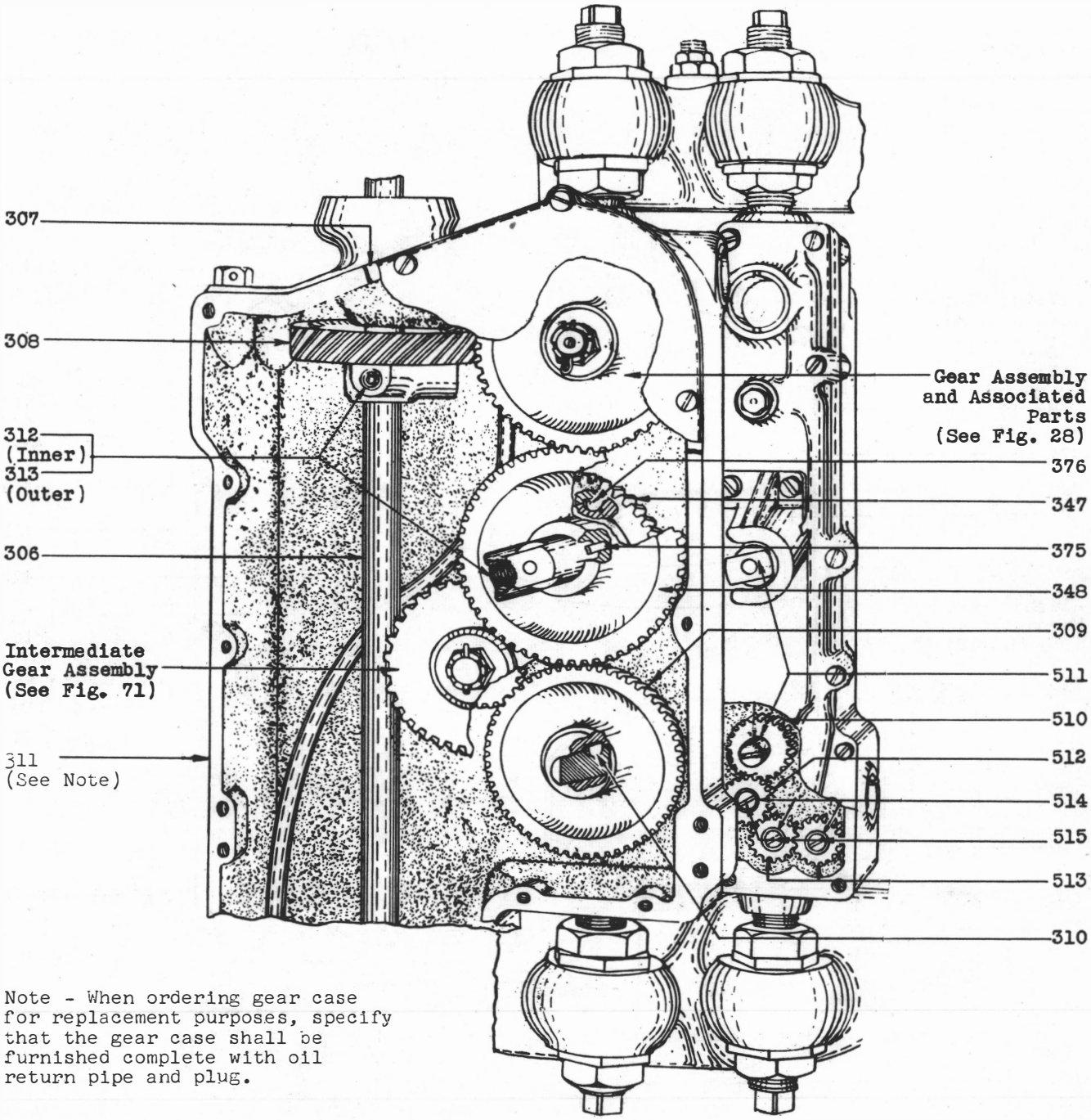


Note - When ordering gear case for replacement purposes, specify that the gear case shall be furnished complete with oil return pipe and plug.

**Fig. 62 - Internal Parts - Gear Case and Bearing Box Non Worm End of Drive (No. 24E Drive)**

## DOUBLE SPEED DRIVES WITH INTEGRAL OIL PUMPS

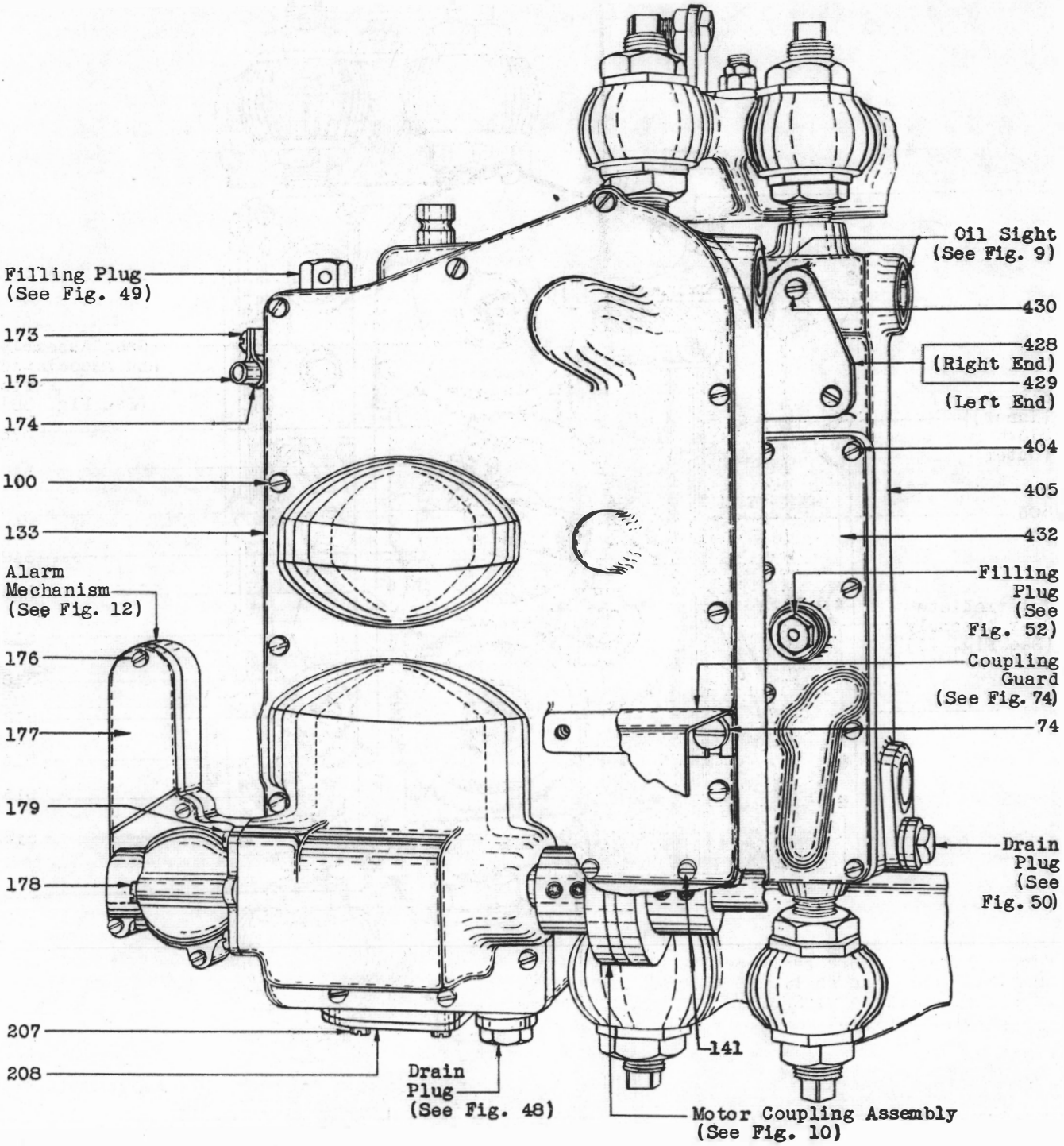


Fig. 63 - External Parts - Gear Case and Bearing Box
Worm End of Drives
(Nos. 45A and 46A Drives)

## DOUBLE SPEED DRIVES WITH INTEGRAL OIL PUMPS

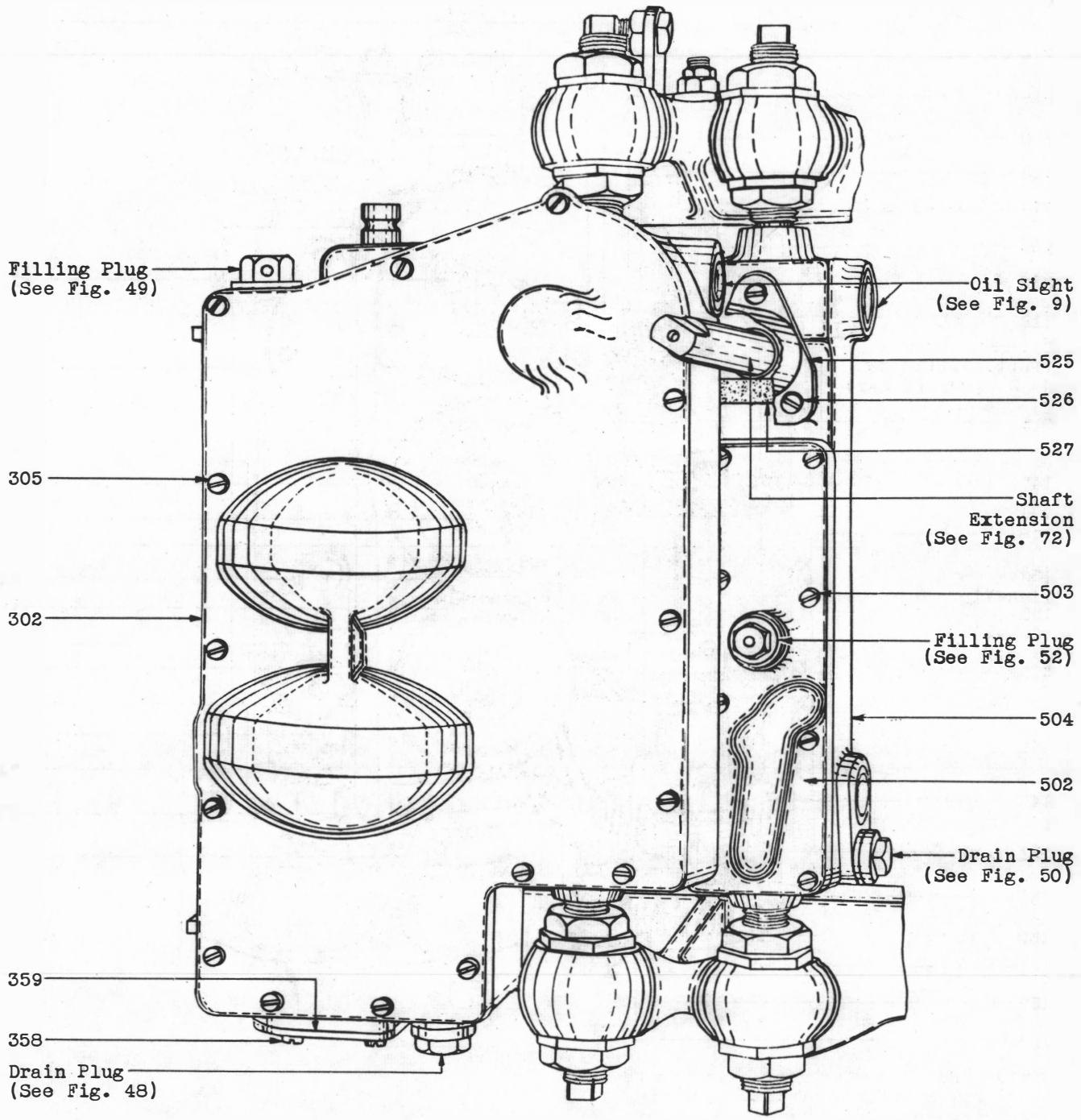


Fig. 64 - External Parts - Gear Case and Bearing Box
Non Worm End of Drive
(No. 46A Drive)

## DOUBLE SPEED DRIVES WITH INTEGRAL OIL PUMPS

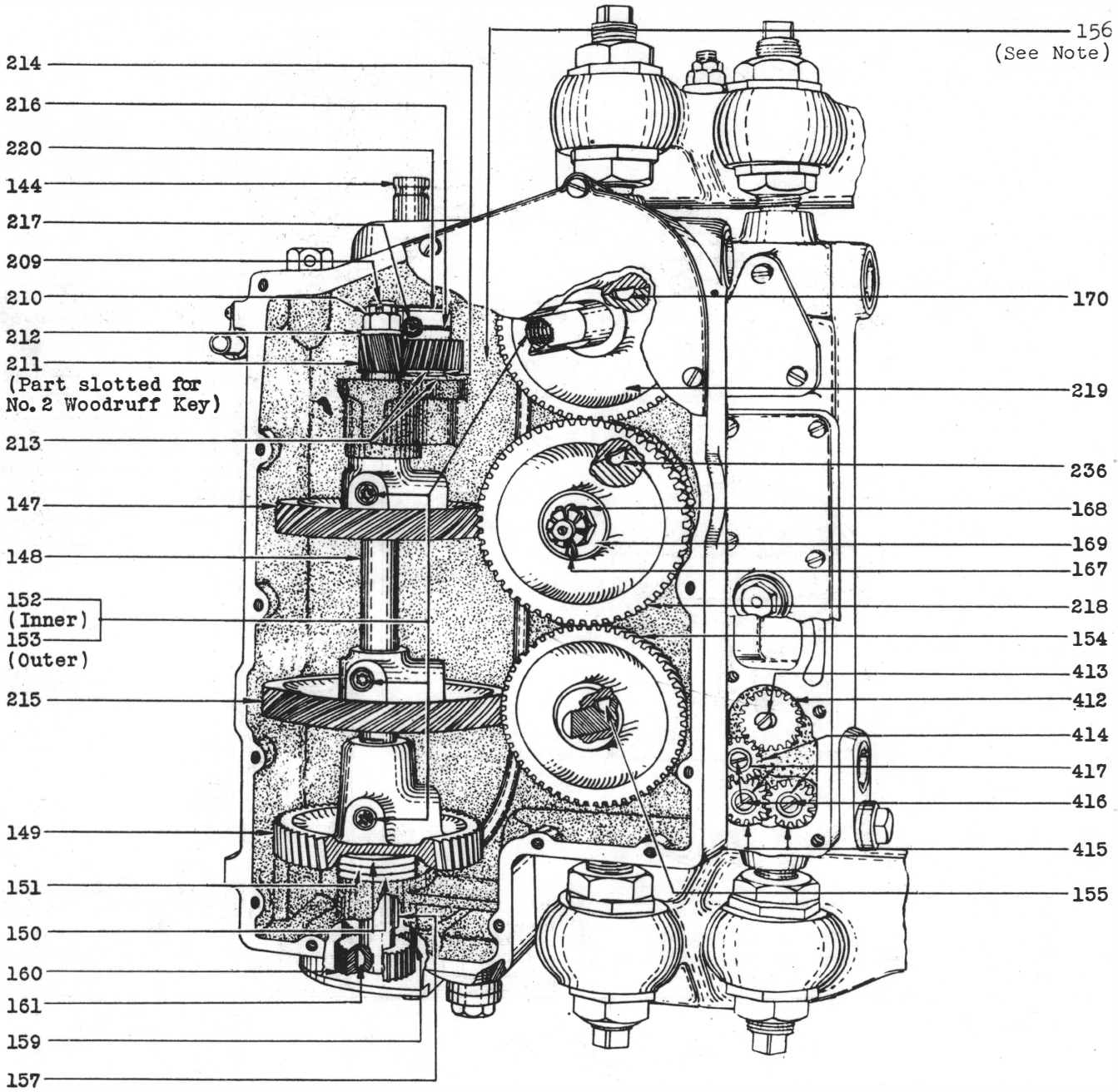


Note - When ordering gear case for replacement purposes, specify that the gear case shall be furnished complete with oil return pipe and plug

**Fig. 65 - Internal Parts - Gear Case and Bearing Box Worm End of Drives (Nos. 45A and 46A Drives)**

## DOUBLE SPEED DRIVES WITH INTEGRAL OIL PUMPS

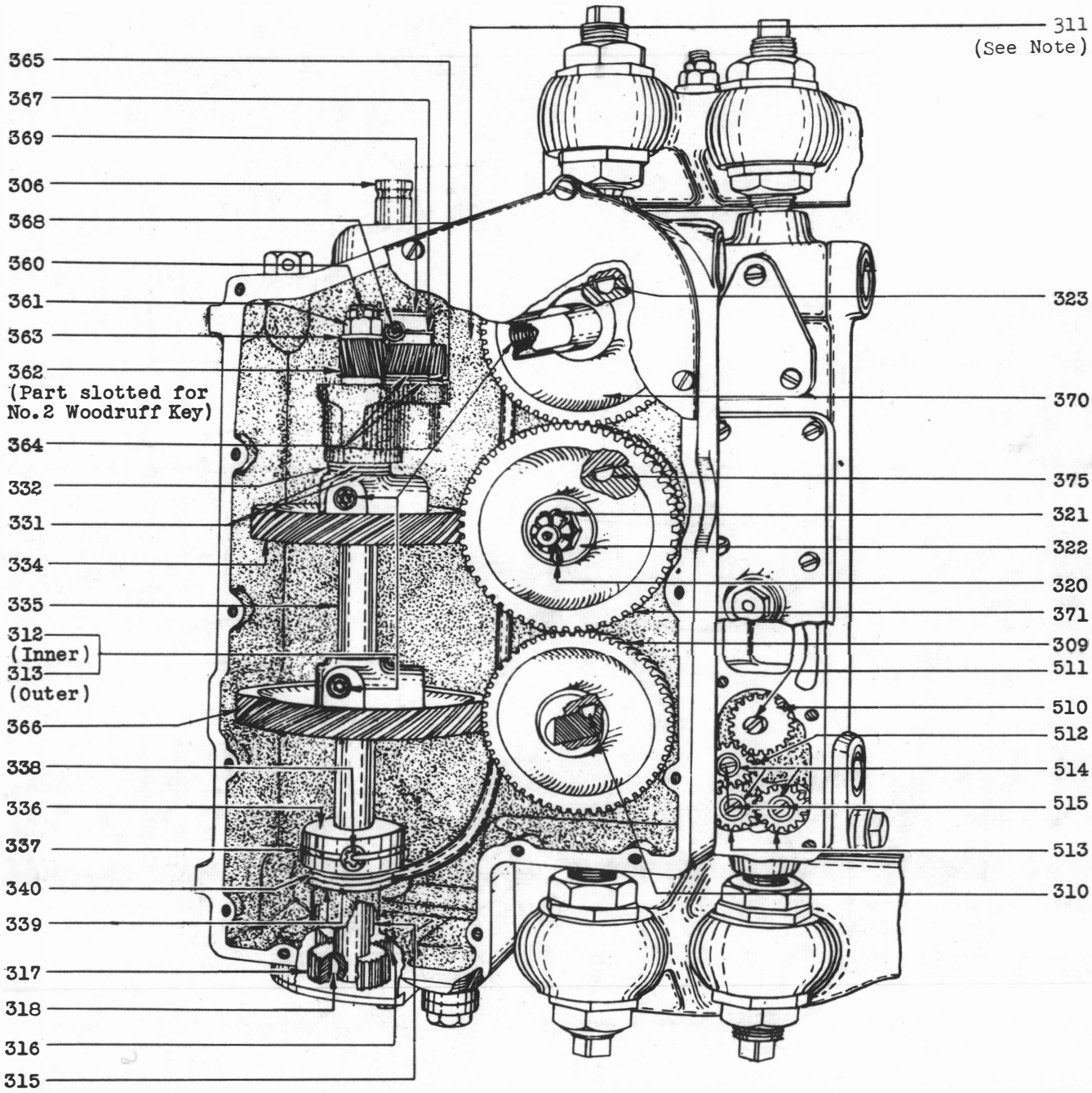


Note - When ordering gear case for replacement purposes, specify that the gear case shall be furnished complete with oil return pipe and plug.

**Fig. 66 - Internal Parts - Gear Case and Bearing Box Non Worm End of Drive (No. 46A Drive)**

## DOUBLE SPEED DRIVES WITH INTEGRAL OIL PUMPS

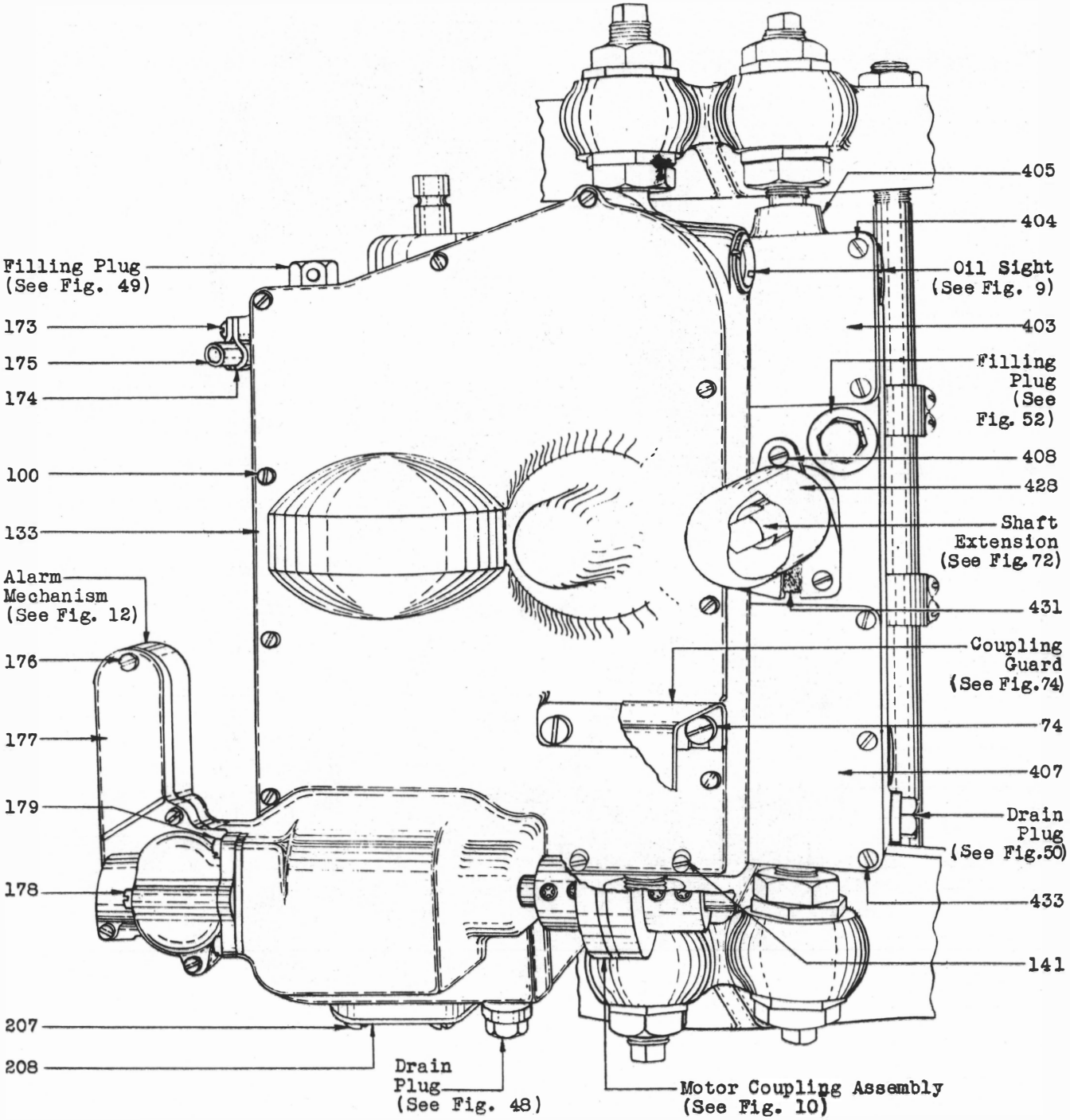


Fig. 67 - External Parts - Gear Case and Bearing Box
Worm End of Drives
(Nos. 47A and 48A Drives)

## DOUBLE SPEED DRIVES WITH INTEGRAL OIL PUMPS

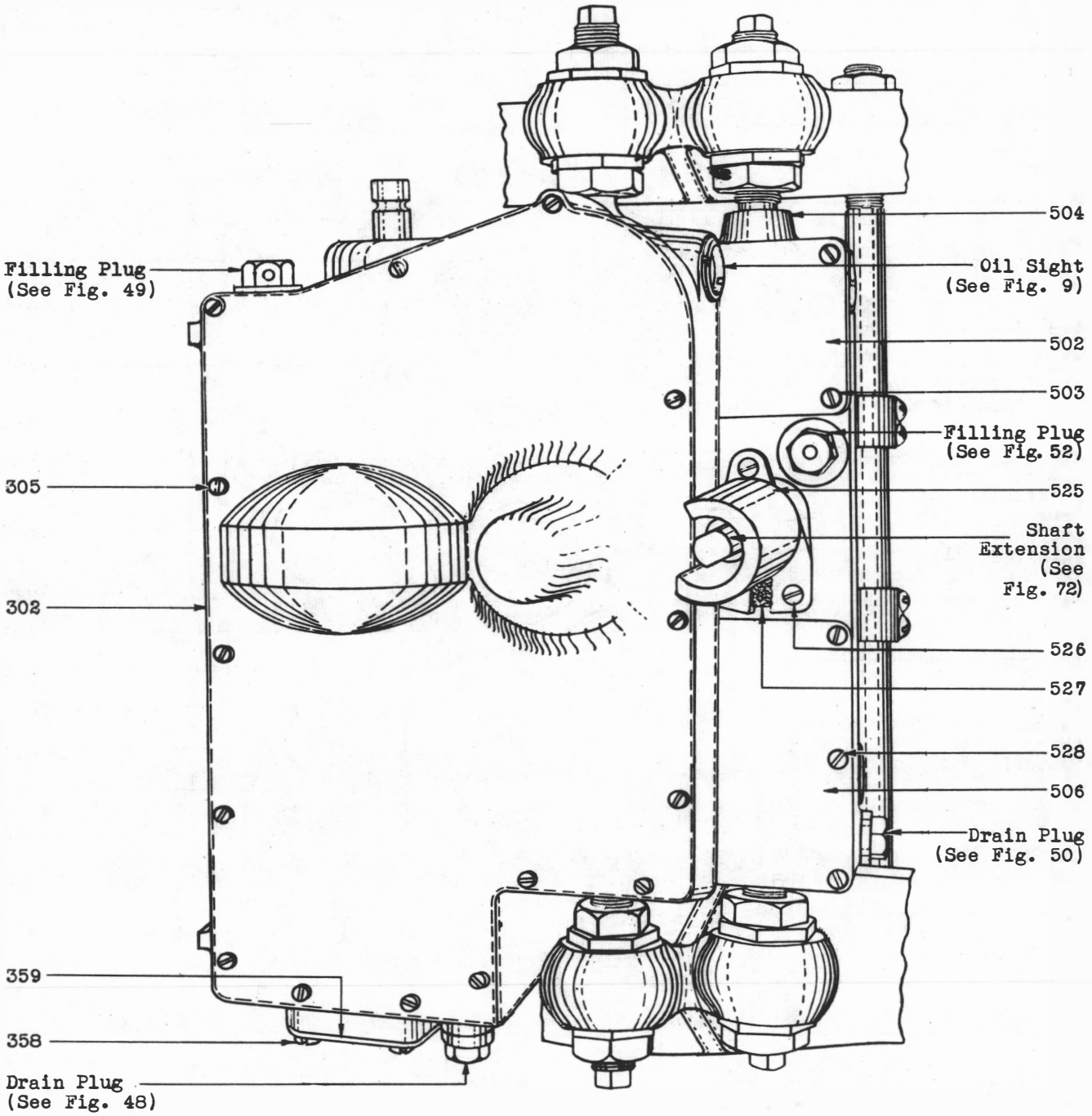


Fig. 68 - External Parts - Gear Case and Bearing Box
Non Worm End of Drive
(No. 48A Drive)

## DOUBLE SPEED DRIVES WITH INTEGRAL OIL PUMPS

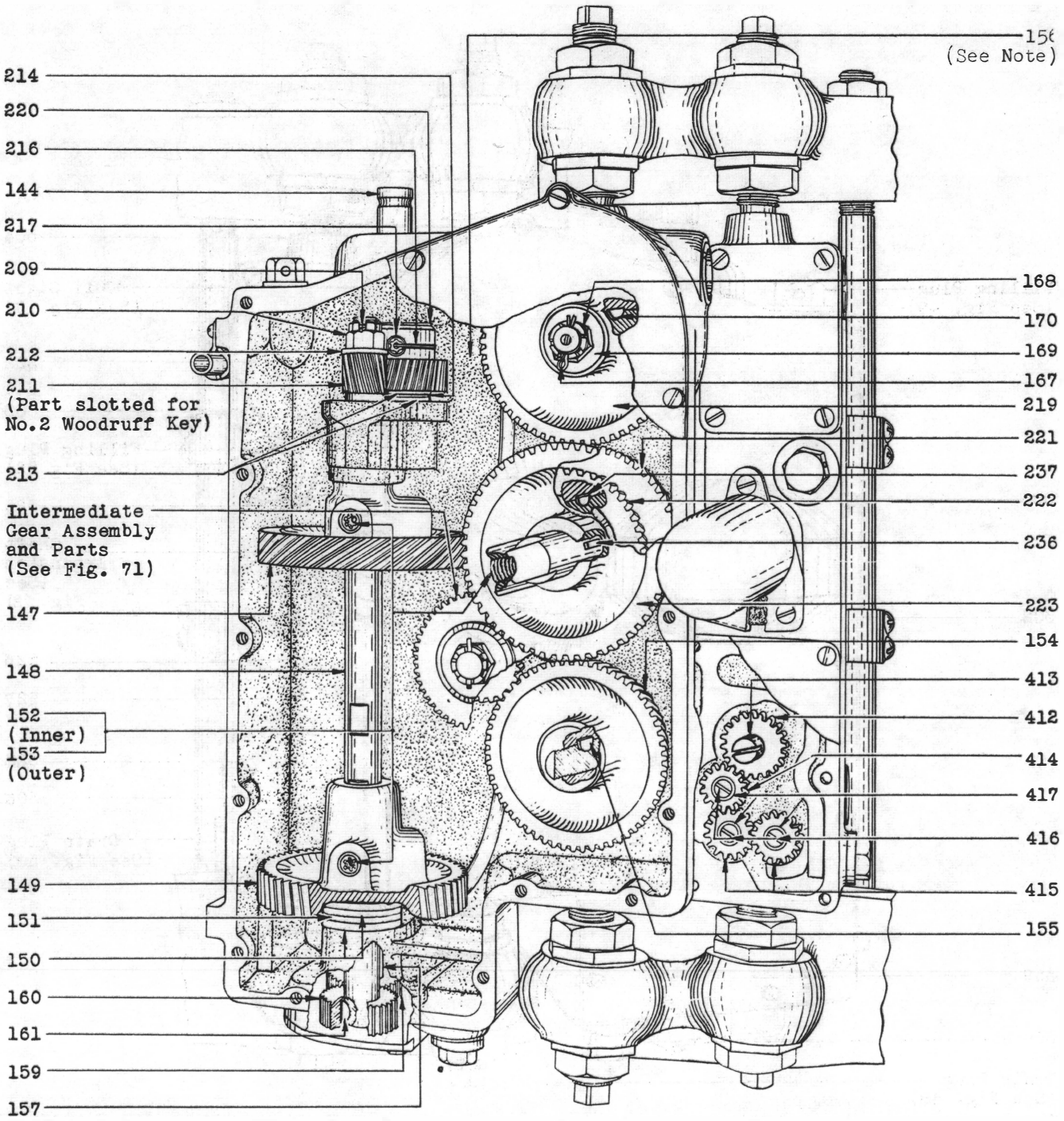


Note - When ordering gear case for replacement purposes, specify that the gear case shall be furnished complete with oil return pipe and plug.

Fig. 69 - Internal Parts - Gear Case and Bearing Box
Worm End of Drive
(Nos. 47A and 48A Drives)

## DOUBLE SPEED DRIVES WITH INTEGRAL OIL PUMPS

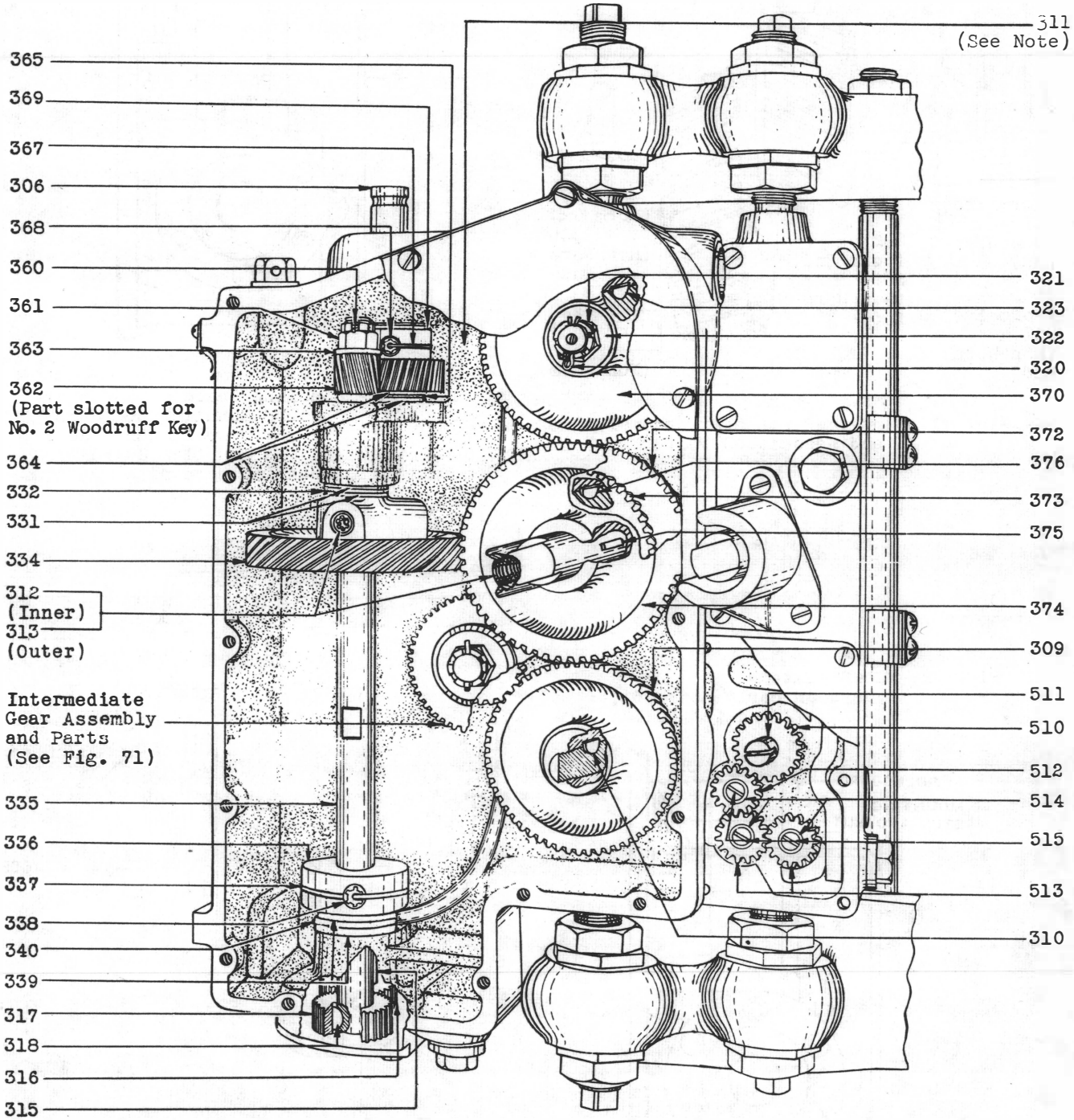


Note - When ordering gear case for replacement purposes, specify that the gear case shall be furnished complete with oil return pipe and plug.

**Fig. 70 - Internal Parts - Gear Case and Bearing Box Non Worm End of Drive (No. 48A Drive)**

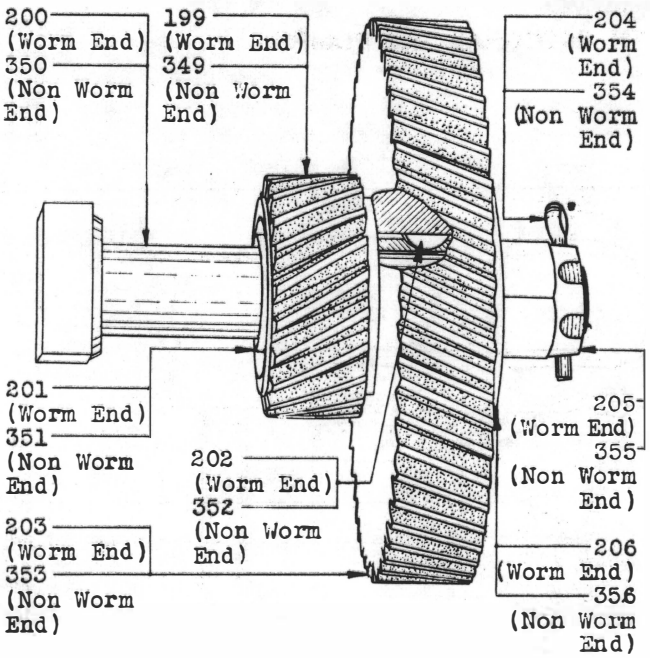


Fig. 71 - Intermediate Gear Assembly and Associated Parts

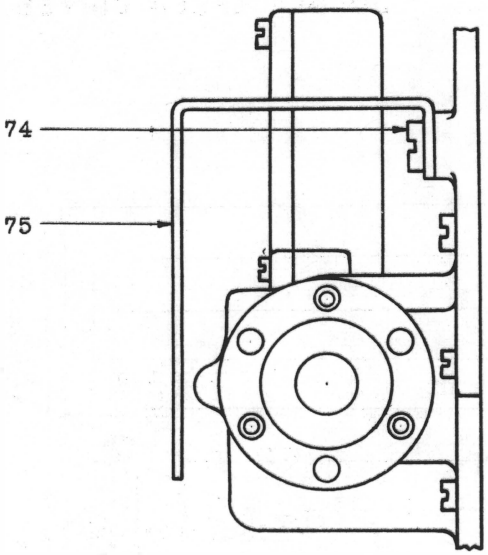


Fig. 74 - Coupling Guard (Where Coupling Guard is sprung over the Shoulders of the Coupling Guard Mounting Screws)

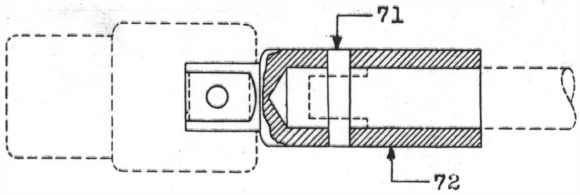


Fig. 72 - Shaft Extension Used on early Nos. 45A, 46A, 47A and 48A Drives

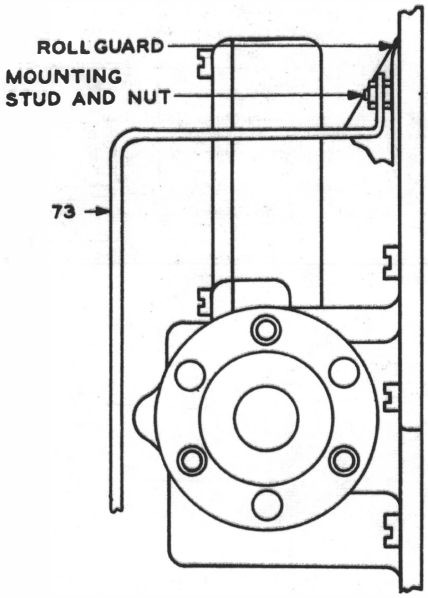


Fig. 73 - Coupling Guard (Where Coupling Guard Is Secured by Studs and Nuts)

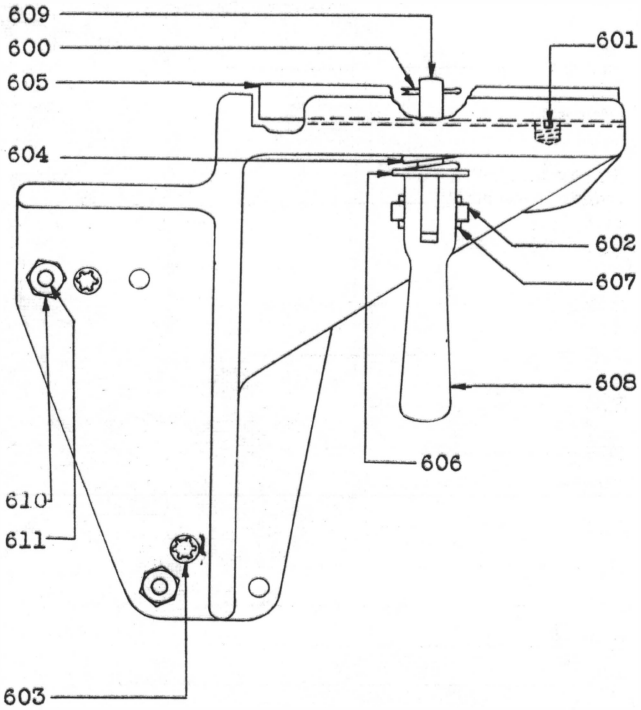


Fig. 75 - 1, 2, 4 and 5 Type Brackets

DRIVE CODE - MISCELLANEOUS PARTS

| ITEM NO. | PIECE PART NUMBER | NAME | 1A | 1C | 1D | 1E | 2A | 3A | 3C | 3D | 3E | 3F | 4A | 4B | 17A | 17B | 17E | 18A | 18B | 18C | 18D | 18G | 18H | 18J | 19A | 19B | 19E | 20A |
|---|---|---|---|---|---|---|---|---|---|---|---|---|---|---|---|---|---|---|---|---|---|---|---|---|---|---|---|---|
| 1 | P-146243 | Lock Nut | √ | √ | √ | √ | √ | √ | √ | √ | √ | √ | √ | √ | √ | √ | √ | √ | √ | √ | √ | √ | √ | √ | √ | √ | √ | √ |
| 2 | P-146242 | Adjusting Pivot Screw | √ | √ | √ | √ | √ | √ | √ | √ | √ | √ | √ | √ | √ | √ | √ | √ | √ | √ | √ | √ | √ | √ | √ | √ | √ | √ |
| 3 | P-146241 | Eccentric Bushing (outside) | √ | √ | √ | √ | √ | √ | √ | √ | √ | √ | √ | √ | √ | √ | √ | √ | √ | √ | √ | √ | √ | √ | √ | √ | √ | √ |
| 4 | P-146240 | Eccentric Bushing (inside) | √ | √ | √ | √ | √ | √ | √ | √ | √ | √ | √ | √ | √ | √ | √ | √ | √ | √ | √ | √ | √ | √ | √ | √ | √ | √ |
| 5 | P-146244 | Lock Nut | √ | √ | √ | √ | √ | √ | √ | √ | √ | √ | √ | √ | √ | √ | √ | √ | √ | √ | √ | √ | √ | √ | √ | √ | √ | √ |
| 6 | P-170290 | Anchor Plate |  |  |  |  |  |  |  |  |  |  |  |  |  |  | √ |  |  |  |  | √ | √ | √ |  |  | √ |  |
| 7 | P-126197 | Screw |  | √ |  |  |  |  | √ |  | √ | √ |  |  |  |  |  |  |  |  |  |  |  |  |  |  |  |  |
|  | P-133449 | Screw | √ |  | √ | √ | √ | √ |  | √ |  |  | √ | √ | √ | √ |  | √ | √ |  | √ |  |  | √ | √ | √ |  | √ |
|  | P-210215 | Screw |  |  |  |  |  |  |  |  |  |  |  |  |  |  | √ |  |  | √ |  | √ | √ |  |  |  | √ |  |
| 8 | P-170396 | Screw | √ | √ | √ | √ | √ | √ | √ | √ | √ | √ | √ | √ |  |  | √ |  |  |  |  | √ | √ | √ |  |  | √ |  |
| 9 | P-146262 | Multiple Bank Bracket | √ | √ | √ | √ | √ | √ | √ | √ | √ | √ | √ | √ |  |  | √ |  |  |  |  | √ | √ | √ |  |  | √ |  |
| 10 | P-146261 | Nut | √ | √ | √ | √ | √ | √ | √ | √ | √ | √ | √ | √ |  | √ | √ |  |  |  | √ | √ | √ | √ |  | √ | √ |  |
| 11 | P-146260 | Stud | √ | √ | √ | √ | √ | √ | √ | √ | √ | √ | √ | √ |  | √ | √ |  |  |  | √ | √ | √ | √ |  | √ | √ |  |
| 12 | P-154505 | Anchor Plate |  |  |  |  |  |  |  |  |  |  |  |  |  |  |  |  |  |  |  |  |  |  |  |  |  |  |
| 13 | P-154506 | Screw |  |  |  |  |  |  |  |  |  |  |  |  |  |  |  |  |  |  |  |  |  |  |  |  |  |  |
| 14 | P-126197 | Screw |  |  |  |  |  |  |  |  |  |  |  |  |  |  |  |  |  |  |  |  |  |  |  |  |  |  |
|  | P-133449 | Screw |  |  |  |  |  |  |  |  |  |  |  |  | √ | √ |  | √ | √ |  | √ |  |  |  | √ | √ |  | √ |
|  | P-210215 | Screw |  |  |  |  |  |  |  |  |  |  |  |  |  |  |  |  |  | √ |  |  |  |  |  |  |  |  |
| 15 | P-154743 | Support Plate |  |  |  |  |  |  |  |  |  |  |  |  | √ | √ | √ | √ | √ | √ | √ | √ | √ | √ | √ | √ | √ | √ |
| 16 | P-147242 | Friction Roll | √ | √ | √ | √ | √ | √ | √ | √ | √ | √ | √ | √ |  |  |  |  |  |  |  |  |  |  |  |  |  |  |
|  | P-154498 | Friction Roll |  |  |  |  |  |  |  |  |  |  |  |  | √ | √ | √ | √ | √ | √ | √ | √ | √ | √ | √ | √ | √ | √ |
|  | P-154637 | Friction Roll |  |  |  |  |  |  |  |  |  |  |  |  |  |  |  |  |  |  |  |  |  |  |  |  |  |  |
|  | P-170462 | Friction Roll (front) |  |  |  |  |  |  |  |  |  |  |  |  |  |  |  |  |  |  |  |  |  |  |  |  |  |  |
|  | P-170554 | Friction Roll (rear) |  |  |  |  |  |  |  |  |  |  |  |  |  |  |  |  |  |  |  |  |  |  |  |  |  |  |
|  | P-170499 | Friction Roll |  |  |  |  |  |  |  |  |  |  |  |  |  |  |  |  |  |  |  |  |  |  |  |  |  |  |
| 17 | P-147244 | Friction Roll |  |  |  |  | √ |  |  |  |  |  | √ | √ |  |  |  |  |  |  |  |  |  |  |  |  |  |  |
|  | P-170196 | Friction Roll |  |  |  |  |  |  |  |  |  |  |  |  |  |  |  |  |  |  |  |  |  |  |  |  |  |  |
|  | P-170463 | Friction Roll |  |  |  |  |  |  |  |  |  |  |  |  |  |  |  |  |  |  |  |  |  |  |  |  |  |  |
|  | P-170555 | Friction Roll |  |  |  |  |  |  |  |  |  |  |  |  |  |  |  |  |  |  |  |  |  |  |  |  |  |  |
| 18 | P-147244 | Friction Roll | √ | √ | √ | √ |  | √ | √ | √ | √ | √ |  |  |  |  |  |  |  |  |  |  |  |  |  |  |  |  |
|  | P-147246 | Friction Roll |  |  |  |  | √ |  |  |  |  |  | √ | √ |  |  |  |  |  |  |  |  |  |  |  |  |  |  |
|  | P-154499 | Friction Roll |  |  |  |  |  |  |  |  |  |  |  |  | √ |  |  | √ | √ |  |  |  |  |  | √ |  |  | √ |
|  | P-170209 | Friction Roll |  |  |  |  |  |  |  |  |  |  |  |  |  | √ | √ |  |  | √ | √ | √ | √ | √ |  | √ | √ |  |
|  | P-170196 | Friction Roll |  |  |  |  |  |  |  |  |  |  |  |  |  |  |  |  |  |  |  |  |  |  |  |  |  |  |
|  | P-170252 | Friction Roll |  |  |  |  |  |  |  |  |  |  |  |  |  |  |  |  |  |  |  |  |  |  |  |  |  |  |
|  | P-154638 | Friction Roll |  |  |  |  |  |  |  |  |  |  |  |  |  |  |  |  |  |  |  |  |  |  |  |  |  |  |
|  | P-170197 | Friction Roll |  |  |  |  |  |  |  |  |  |  |  |  |  |  |  |  |  |  |  |  |  |  |  |  |  |  |
|  | P-170464 | Friction Roll |  |  |  |  |  |  |  |  |  |  |  |  |  |  |  |  |  |  |  |  |  |  |  |  |  |  |
|  | P-170501 | Friction Roll |  |  |  |  |  |  |  |  |  |  |  |  |  |  |  |  |  |  |  |  |  |  |  |  |  |  |
| 19 | P-170362 | Bar | √ | √ | √ | √ | √ | √ | √ | √ | √ | √ | √ | √ |  |  |  |  |  |  |  |  |  |  |  |  |  |  |
|  | P-170363 | Bar |  |  |  |  |  |  |  |  |  |  |  |  | √ | √ | √ | √ | √ | √ | √ | √ | √ | √ | √ | √ | √ | √ |

| ITEM NO. | PIECE PART NUMBER | NAME | 20B | 20C | 20D | 20G | 20H | 21A | 21B | 21C | 21D | 21E | 21F | 21G | 21H | 21R | 22A | 22B | 22C | 23A | 23B | 23C | 23D | 23F | 23G | 23H | 23J | 23K |
|---|---|---|---|---|---|---|---|---|---|---|---|---|---|---|---|---|---|---|---|---|---|---|---|---|---|---|---|---|
| 1 | P-146243 | Lock Nut | √ | √ | √ | √ | √ | √ | √ | √ | √ | √ | √ | √ | √ | √ | √ | √ | √ | √ | √ | √ | √ | √ | √ | √ | √ | √ |
| 2 | P-146242 | Adjusting Pivot Screw | √ | √ | √ | √ | √ | √ | √ | √ | √ | √ | √ | √ | √ | √ | √ | √ | √ | √ | √ | √ | √ | √ | √ | √ | √ | √ |
| 3 | P-146241 | Eccentric Bushing (outside) | √ | √ | √ | √ | √ | √ | √ | √ | √ | √ | √ | √ | √ | √ | √ | √ | √ | √ | √ | √ | √ | √ | √ | √ | √ | √ |
| 4 | P-146240 | Eccentric Bushing (inside) | √ | √ | √ | √ | √ | √ | √ | √ | √ | √ | √ | √ | √ | √ | √ | √ | √ | √ | √ | √ | √ | √ | √ | √ | √ | √ |
| 5 | P-146244 | Lock Nut | √ | √ | √ | √ | √ | √ | √ | √ | √ | √ | √ | √ | √ | √ | √ | √ | √ | √ | √ | √ | √ | √ | √ | √ | √ | √ |
| 6 | P-170290 | Anchor Plate |  |  |  | √ | √ |  |  |  |  |  |  |  |  |  |  |  |  |  |  |  |  |  |  |  |  |  |
| 7 | P-126197 | Screw |  |  |  |  |  |  |  | √ |  |  |  |  |  |  |  |  |  |  |  | √ | √ | √ |  |  | √ | √ |
|  | P-133449 | Screw | √ | √ | √ |  | √ | √ | √ |  | √ |  |  |  |  |  | √ | √ |  | √ | √ |  |  |  |  | √ |  |  |
|  | P-210215 | Screw |  |  |  | √ |  |  |  |  |  | √ | √ | √ | √ | √ |  |  | √ |  |  |  |  |  | √ |  |  |  |
| 8 | P-170396 | Screw |  |  |  | √ | √ | √ | √ | √ | √ | √ | √ | √ | √ | √ | √ | √ | √ | √ | √ | √ | √ | √ | √ | √ | √ | √ |
| 9 | P-146262 | Multiple Bank Bracket |  |  |  | √ | √ | √ | √ | √ | √ | √ | √ | √ | √ | √ | √ | √ | √ | √ | √ | √ | √ | √ | √ | √ | √ | √ |
| 10 | P-146261 | Nut |  | √ | √ | √ | √ | √ | √ | √ | √ | √ | √ | √ | √ | √ | √ | √ | √ | √ | √ | √ | √ | √ | √ | √ | √ | √ |
| 11 | P-146260 | Stud |  | √ | √ | √ | √ | √ | √ | √ | √ | √ | √ | √ | √ | √ | √ | √ | √ | √ | √ | √ | √ | √ | √ | √ | √ | √ |
| 12 | P-154505 | Anchor Plate |  |  |  |  |  |  |  |  |  |  |  |  |  |  |  |  |  |  |  |  |  |  |  |  |  |  |
| 13 | P-154506 | Screw |  |  |  |  |  |  |  |  |  |  |  |  |  |  |  |  |  |  |  |  |  |  |  |  |  |  |
| 14 | P-126197 | Screw |  |  |  |  |  |  |  |  |  |  |  |  |  |  |  |  |  |  |  |  |  |  |  |  |  |  |
|  | P-133449 | Screw | √ | √ | √ |  |  |  |  |  |  |  |  |  |  |  |  |  |  |  |  |  |  |  |  |  |  |  |
|  | P-210215 | Screw |  |  |  |  |  |  |  |  |  |  |  |  |  |  |  |  |  |  |  |  |  |  |  |  |  |  |
| 15 | P-154743 | Support Plate | √ | √ | √ | √ | √ |  |  |  |  |  |  |  |  |  |  |  |  |  |  |  |  |  |  |  |  |  |
| 16 | P-147242 | Friction Roll |  |  |  |  |  | √ | √ | √ | √ | √ | √ | √ | √ | √ | √ | √ | √ | √ | √ | √ | √ | √ | √ | √ | √ | √ |
|  | P-154498 | Friction Roll | √ | √ | √ | √ | √ |  |  |  |  |  |  |  |  |  |  |  |  |  |  |  |  |  |  |  |  |  |
|  | P-154637 | Friction Roll |  |  |  |  |  |  |  |  |  |  |  |  |  |  |  |  |  |  |  |  |  |  |  |  |  |  |
|  | P-170462 | Friction Roll (front) |  |  |  |  |  |  |  |  |  |  |  |  |  |  |  |  |  |  |  |  |  |  |  |  |  |  |
|  | P-170554 | Friction Roll (rear) |  |  |  |  |  |  |  |  |  |  |  |  |  |  |  |  |  |  |  |  |  |  |  |  |  |  |
|  | P-170499 | Friction Roll |  |  |  |  |  |  |  |  |  |  |  |  |  |  |  |  |  |  |  |  |  |  |  |  |  |  |
| 17 | P-147244 | Friction Roll |  |  |  |  |  |  |  |  |  |  |  |  |  |  |  |  |  |  |  |  |  |  |  |  |  |  |
|  | P-170196 | Friction Roll |  |  |  |  |  |  |  |  |  |  |  |  |  |  |  |  |  |  |  |  |  |  |  |  |  |  |
|  | P-170463 | Friction Roll |  |  |  |  |  |  |  |  |  |  |  |  |  |  |  |  |  |  |  |  |  |  |  |  |  |  |
|  | P-170555 | Friction Roll |  |  |  |  |  |  |  |  |  |  |  |  |  |  |  |  |  |  |  |  |  |  |  |  |  |  |
| 18 | P-147244 | Friction Roll |  |  |  |  |  | √ | √ | √ | √ |  |  |  |  |  |  |  |  | √ | √ | √ | √ | √ |  |  |  |  |
|  | P-147246 | Friction Roll |  |  |  |  |  |  |  |  |  |  |  |  |  |  | √ | √ |  |  |  |  |  |  |  |  |  |  |
|  | P-154499 | Friction Roll | √ |  |  |  |  |  |  |  |  |  |  |  |  |  |  |  |  |  |  |  |  |  |  |  |  |  |
|  | P-170209 | Friction Roll |  | √ | √ | √ | √ |  |  |  |  |  |  |  |  |  |  |  |  |  |  |  |  |  |  |  |  |  |
|  | P-170196 | Friction Roll |  |  |  |  |  |  |  |  |  |  |  |  |  |  |  |  |  |  |  |  |  |  |  |  |  |  |
|  | P-170252 | Friction Roll |  |  |  |  |  |  |  |  |  |  |  |  |  |  |  |  |  |  |  |  |  |  |  |  |  |  |
|  | P-154638 | Friction Roll |  |  |  |  |  |  |  |  |  |  |  |  |  |  |  |  |  |  |  |  |  |  |  |  |  |  |
|  | P-170197 | Friction Roll |  |  |  |  |  |  |  |  |  |  |  |  |  |  |  |  |  |  |  |  |  |  |  |  |  |  |
|  | P-170464 | Friction Roll |  |  |  |  |  |  |  |  |  |  |  |  |  |  |  |  |  |  |  |  |  |  |  |  |  |  |
|  | P-170501 | Friction Roll |  |  |  |  |  |  |  |  |  |  |  |  |  |  |  |  |  |  |  |  |  |  |  |  |  |  |
| 19 | P-170362 | Bar |  |  |  |  |  | √ | √ | √ | √ | √ | √ | √ | √ | √ | √ | √ | √ | √ | √ | √ | √ | √ | √ | √ | √ | √ |
|  | P-170363 | Bar | √ | √ | √ | √ | √ |  |  |  |  |  |  |  |  |  |  |  |  |  |  |  |  |  |  |  |  |  |

| ITEM NO. | PIECE PART NUMBER | NAME | 23L | 23T | 23U | 23W | 24A | 24B | 24C | 24D | 24E | 24F | 25A | 25B | 25E | 26A | 26B | 26C | 26D | 26G | 26H | 35A | 45A | 46A | 47A | 48A | 49A |
|---|---|---|---|---|---|---|---|---|---|---|---|---|---|---|---|---|---|---|---|---|---|---|---|---|---|---|---|---|
| 1 | P-146243 | Lock Nut | √ | √ | √ | √ | √ | √ | √ | √ | √ | √ | √ | √ | √ | √ | √ | √ | √ | √ | √ | √ | √ | √ | √ | √ | √ |
| 2 | P-146242 | Adjusting Pivot Screw | √ | √ | √ | √ | √ | √ | √ | √ | √ | √ | √ | √ | √ | √ | √ | √ | √ | √ | √ | √ | √ | √ | √ | √ | √ |
| 3 | P-146241 | Eccentric Bushing (outside) | √ | √ | √ | √ | √ | √ | √ | √ | √ | √ | √ | √ | √ | √ | √ | √ | √ | √ | √ | √ | √ | √ | √ | √ | √ |
| 4 | P-146240 | Eccentric Bushing (inside) | √ | √ | √ | √ | √ | √ | √ | √ | √ | √ | √ | √ | √ | √ | √ | √ | √ | √ | √ | √ | √ | √ | √ | √ | √ |
| 5 | P-146244 | Lock Nut | √ | √ | √ | √ | √ | √ | √ | √ | √ | √ | √ | √ | √ | √ | √ | √ | √ | √ | √ | √ | √ | √ | √ | √ | √ |
| 6 | P-170290 | Anchor Plate |  |  |  |  |  |  |  |  |  |  |  |  | √ |  |  |  |  | √ |  |  |  |  |  |  |  |
| 7 | P-126197 | Screw |  |  |  |  |  |  |  |  |  |  |  |  |  |  |  |  |  |  |  |  |  |  |  |  |  |
|  | P-133449 | Screw |  |  | √ | √ | √ | √ | √ | √ |  | √ |  | √ |  |  |  |  | √ |  | √ |  | √ | √ | √ | √ | √ |
|  | P-210215 | Screw | √ | √ |  |  |  |  |  |  | √ |  |  |  | √ |  |  | √ |  | √ |  | √ |  |  |  |  |  |
| 8 | P-170396 | Screw | √ | √ | √ | √ | √ | √ | √ | √ | √ | √ |  |  | √ |  |  |  |  | √ | √ | √ | √ | √ | √ | √ | √ |
| 9 | P-146262 | Multiple Bank Bracket | √ | √ | √ | √ | √ | √ | √ | √ | √ | √ |  |  | √ |  |  |  |  | √ | √ | √ | √ | √ | √ | √ | √ |
| 10 | P-146261 | Nut | √ | √ | √ | √ | √ | √ | √ | √ | √ | √ |  |  | √ |  |  |  |  | √ | √ | √ | √ | √ | √ | √ | √ |
| 11 | P-146260 | Stud | √ | √ | √ | √ | √ | √ | √ | √ | √ | √ |  |  | √ |  |  |  |  | √ | √ | √ | √ | √ | √ | √ | √ |
| 12 | P-154505 | Anchor Plate |  |  |  |  |  |  |  |  |  |  |  |  |  |  |  |  |  |  |  |  |  |  |  |  |  |
| 13 | P-154506 | Screw |  |  |  |  |  |  |  |  |  |  |  |  |  |  |  |  |  |  |  |  |  |  |  |  |  |
| 14 | P-126197 | Screw |  |  |  |  |  |  |  |  |  |  | √ |  |  | √ | √ |  |  |  |  |  |  |  |  |  |  |
|  | P-133449 | Screw |  |  |  |  |  |  |  |  |  |  |  | √ |  |  |  |  | √ |  |  |  |  |  |  |  |  |
|  | P-210215 | Screw |  |  |  |  |  |  |  |  |  |  |  |  |  |  |  | √ |  |  |  |  |  |  |  |  |  |
| 15 | P-154743 | Support Plate |  |  |  |  |  |  |  |  |  |  | √ | √ | √ | √ | √ | √ | √ | √ | √ |  |  |  |  |  |  |
| 16 | P-147242 | Friction Roll | √ | √ | √ | √ | √ | √ | √ | √ | √ | √ |  |  |  |  |  |  |  |  |  | √ |  |  |  |  | √ |
|  | P-154498 | Friction Roll |  |  |  |  |  |  |  |  |  |  |  |  |  |  |  |  |  |  |  |  |  |  |  |  |  |
|  | P-154637 | Friction Roll |  |  |  |  |  |  |  |  |  |  | √ | √ | √ | √ | √ | √ | √ | √ | √ |  |  |  |  |  |  |
|  | P-170462 | Friction Roll (front) |  |  |  |  |  |  |  |  |  |  |  |  |  |  |  |  |  |  |  |  | √ | √ |  |  |  |
|  | P-170554 | Friction Roll (rear) |  |  |  |  |  |  |  |  |  |  |  |  |  |  |  |  |  |  |  |  | √ | √ |  |  |  |
|  | P-170499 | Friction Roll |  |  |  |  |  |  |  |  |  |  |  |  |  |  |  |  |  |  |  |  |  |  | √ | √ |  |
| 17 | P-147244 | Friction Roll |  |  |  |  | √ | √ | √ | √ |  |  |  |  |  |  |  |  |  |  |  |  |  |  |  |  |  |
|  | P-170196 | Friction Roll |  |  |  |  |  |  |  |  | √ | √ |  |  |  |  |  |  |  |  |  |  |  |  |  |  |  |
|  | P-170463 | Friction Roll |  |  |  |  |  |  |  |  |  |  |  |  |  |  |  |  |  |  |  |  | √ | √ |  |  |  |
|  | P-170555 | Friction Roll |  |  |  |  |  |  |  |  |  |  |  |  |  |  |  |  |  |  |  |  |  |  | √ | √ |  |
| 18 | P-147244 | Friction Roll |  |  |  | √ |  |  |  |  |  |  |  |  |  |  |  |  |  |  |  |  |  |  |  |  |  |
|  | P-147246 | Friction Roll |  |  |  |  | √ | √ | √ | √ |  |  |  |  |  |  |  |  |  |  |  |  |  |  |  |  |  |
|  | P-154499 | Friction Roll |  |  |  |  |  |  |  |  |  |  |  |  |  |  |  |  |  |  |  |  |  |  |  |  |  |
|  | P-170209 | Friction Roll |  |  |  |  |  |  |  |  |  |  |  |  |  |  |  |  |  |  |  |  |  |  |  |  |  |
|  | P-170196 | Friction Roll |  |  |  |  |  |  |  |  |  |  |  |  |  |  |  |  |  |  |  | √ |  |  |  |  | √ |
|  | P-170252 | Friction Roll |  |  |  |  |  |  |  |  | √ | √ |  |  |  |  |  |  |  |  |  |  |  |  |  |  |  |
|  | P-154638 | Friction Roll |  |  |  |  |  |  |  |  |  |  | √ |  |  | √ | √ |  |  |  |  |  |  |  |  |  |  |
|  | P-170197 | Friction Roll |  |  |  |  |  |  |  |  |  |  |  | √ | √ |  |  | √ | √ | √ | √ |  |  |  |  |  |  |
|  | P-170464 | Friction Roll |  |  |  |  |  |  |  |  |  |  |  |  |  |  |  |  |  |  |  |  | √ | √ |  |  |  |
|  | P-170501 | Friction Roll |  |  |  |  |  |  |  |  |  |  |  |  |  |  |  |  |  |  |  |  |  |  | √ | √ |  |
| 19 | P-170362 | Bar | √ | √ | √ | √ | √ | √ | √ | √ | √ | √ |  |  |  |  |  |  |  |  |  | √ | √ | √ | √ | √ | √ |
|  | P-170363 | Bar |  |  |  |  |  |  |  |  |  |  | √ | √ | √ | √ | √ | √ | √ | √ | √ |  |  |  |  |  |  |

DRIVE CODE - MISCELLANEOUS PARTS

| ITEM NO. | PIECE PART NUMBER | NAME | 1A | 1C | 1D | 1E | 2A | 3A | 3C | 3D | 3E | 3F | 4A | 4B | 17A | 17B | 17E | 18A | 18B | 18C | 18D | 18G | 18H | 18J | 19A | 19B | 19E | 20A | 20B | 20C | 20D | 20G | 20H | 21A | 21B | 21C | 21D | 21E | 21F | 21G | 21H | 21R | 22A | 22B | 22C | 23A | 23B | 23C | 23D | 23F | 23G | 23H | 23J | 23K | 23L | 23T | 23U | 23W | 24A | 24B | 24C | 24D | 24E | 24F | 25A | 25B | 25E | 26A | 26B | 26C | 26D | 26G | 26H | 35A | 45A | 46A | 47A | 48A | 49A |
|---|---|---|---|---|---|---|---|---|---|---|---|---|---|---|---|---|---|---|---|---|---|---|---|---|---|---|---|---|---|---|---|---|---|---|---|---|---|---|---|---|---|---|---|---|---|---|---|---|---|---|---|---|---|---|---|---|---|---|---|---|---|---|---|---|---|---|---|---|---|---|---|---|---|---|---|---|---|---|---|
| 20 | P-125123 | Restoring Plate (reset plate) |✓| |✓|✓|✓|✓| |✓| | |✓|✓| | | | | | | | | | | | | | | | | | |✓|✓| |✓|✓|✓| |✓|✓|✓|✓|✓|✓|✓| | | |✓|✓| | | |✓|✓|✓|✓|✓|✓|✓|✓|✓| | | | | | | | | | | | | | |
| 21 | P-125951 | Screw |✓|✓|✓|✓|✓|✓|✓|✓|✓|✓|✓|✓|✓|✓| |✓|✓| |✓| | | |✓|✓| |✓| |✓|✓| | |✓|✓|✓|✓| | | | | |✓|✓| |✓|✓|✓|✓|✓| | |✓| | | | |✓|✓|✓|✓|✓| |✓|✓| | |✓|✓| | | | | | | | | | |
| | P-210215 | Screw | | | | | | | | | | | | | | | | | |✓| | | | | | | | | | | | | | | | | | | | | | | | | | | | | | | | | | | | | | | | | | | | | | | | | | | | | | | | | | | |
| 22 | P-125136 | Screw |✓|✓|✓|✓|✓|✓|✓|✓|✓|✓|✓|✓|✓|✓|✓|✓|✓|✓|✓|✓|✓|✓|✓|✓|✓|✓|✓|✓|✓|✓|✓|✓|✓|✓|✓|✓|✓|✓|✓|✓|✓|✓|✓|✓|✓|✓|✓|✓|✓|✓|✓|✓|✓|✓|✓|✓|✓|✓|✓|✓|✓|✓|✓|✓|✓|✓|✓|✓|✓|✓|✓|✓|✓|✓|✓|✓|✓|
| 23 | P-125954 | Nut |✓|✓|✓|✓|✓|✓|✓|✓|✓|✓|✓|✓|✓|✓| |✓|✓|✓|✓| | | |✓|✓| |✓| |✓|✓| | |✓|✓|✓|✓| | | | | |✓|✓| |✓|✓|✓|✓|✓| | |✓| | | | |✓|✓|✓|✓|✓| |✓|✓| | |✓|✓| | | | | | | | | | |
| 24 | P-125122 | Clutch Top Locating Plate (for 5 clutches) |✓| |✓|✓|✓|✓| |✓| | |✓|✓|✓|✓|✓|✓|✓|✓|✓|✓|✓|✓|✓|✓|✓|✓|✓|✓|✓|✓|✓|✓|✓| |✓|✓|✓| |✓|✓|✓|✓|✓|✓|✓| | | |✓|✓| | | |✓|✓|✓|✓|✓|✓|✓|✓|✓| | | | | | | | | |✓|✓|✓|✓|✓|✓|
| | P-125459 | Clutch Top Locating Plate (for 4 clutches) | |✓| | | | |✓| |✓|✓| | | | | | | | | | | | | | | | | | | | | | | |✓| | | |✓| | | | | | | |✓|✓|✓| | |✓|✓|✓| | | | | | | | | |✓|✓|✓|✓|✓|✓|✓|✓|✓| | | | | | |
| | P-125460 | Clutch Top Locating Plate (for 3 clutches) | |✓| | | | |✓| |✓|✓| | | | | | | | | | | | | | | | | | | | | | | |✓| | | |✓| | | | | | | |✓|✓|✓| | |✓|✓|✓| | | | | | | | | |✓|✓|✓|✓|✓|✓|✓|✓|✓| | | | | | |
| 25 | P-125121 | Clutch Bottom Locating Plate (for 5 clutches) |✓| |✓|✓|✓|✓| |✓| | |✓|✓|✓|✓| |✓|✓|✓|✓| | | |✓|✓| |✓|✓|✓|✓| | |✓|✓| |✓| | | | | |✓|✓| |✓|✓| | | | | | | | | | |✓|✓|✓|✓|✓| |✓| | | | | | | | | | | | | | | |
| | P-125457 | Clutch Bottom Locating Plate (for 4 clutches) | |✓| | | | |✓| |✓|✓| | | | | | | | | | | | | | | | | | | | | | | |✓| | | | | | | | | | | |✓|✓|✓| | |✓| | | | | | | | | | | |✓|✓| |✓|✓|✓|✓| | | | | | | | |
| | P-125458 | Clutch Bottom Locating Plate (for 3 clutches) | |✓| | | | |✓| |✓|✓| | | | | | | | | | | | | | | | | | | | | | | |✓| | | | | | | | | | | |✓|✓|✓| | |✓| | | | | | | | | | | |✓|✓| |✓|✓|✓|✓| | | | | | | | |
| 26 | P-111552 | Screw |✓|✓|✓|✓|✓|✓|✓|✓|✓|✓|✓|✓|✓|✓|✓|✓|✓|✓|✓|✓|✓|✓|✓|✓|✓|✓|✓|✓|✓|✓|✓|✓|✓|✓|✓|✓|✓|✓|✓|✓|✓|✓|✓|✓|✓|✓|✓|✓|✓|✓|✓|✓|✓|✓|✓|✓|✓|✓|✓|✓|✓|✓|✓|✓|✓|✓|✓|✓|✓|✓|✓|✓|✓|✓|✓|✓|✓|
| 27 | P-170392 | Plate (right) |✓|✓|✓|✓|✓|✓|✓|✓|✓|✓|✓|✓|✓|✓|✓|✓|✓|✓|✓|✓|✓|✓|✓|✓|✓|✓|✓|✓|✓|✓|✓|✓|✓|✓|✓|✓|✓|✓|✓|✓|✓|✓|✓|✓|✓|✓|✓|✓|✓|✓|✓|✓|✓|✓|✓|✓|✓|✓|✓|✓|✓|✓|✓|✓|✓|✓|✓|✓|✓|✓|✓|✓|✓|✓|✓|✓|✓|
| | P-170393 | Plate (left) |✓|✓|✓|✓|✓|✓|✓|✓|✓|✓|✓|✓|✓|✓|✓|✓|✓|✓|✓|✓|✓|✓|✓|✓|✓|✓|✓|✓|✓|✓|✓|✓|✓|✓|✓|✓|✓|✓|✓|✓|✓|✓|✓|✓|✓|✓|✓|✓|✓|✓|✓|✓|✓|✓|✓|✓|✓|✓|✓|✓|✓|✓|✓|✓|✓|✓|✓|✓|✓|✓|✓|✓|✓|✓|✓|✓|✓|
| 28 | P-170552 | Bracket |✓|✓|✓|✓|✓|✓|✓|✓|✓|✓|✓|✓|✓|✓|✓|✓|✓|✓|✓|✓|✓|✓|✓|✓|✓|✓|✓|✓|✓|✓|✓|✓|✓|✓|✓|✓|✓|✓|✓|✓|✓|✓|✓|✓|✓|✓|✓|✓|✓|✓|✓|✓|✓|✓|✓|✓|✓|✓|✓|✓|✓|✓|✓|✓|✓|✓|✓|✓|✓|✓|✓|✓|✓|✓|✓|✓|✓|
| 29 | P-170551 | Clamp |✓|✓|✓|✓|✓|✓|✓|✓|✓|✓|✓|✓|✓|✓|✓|✓|✓|✓|✓|✓|✓|✓|✓|✓|✓|✓|✓|✓|✓|✓|✓|✓|✓|✓|✓|✓|✓|✓|✓|✓|✓|✓|✓|✓|✓|✓|✓|✓|✓|✓|✓|✓|✓|✓|✓|✓|✓|✓|✓|✓|✓|✓|✓|✓|✓|✓|✓|✓|✓|✓|✓|✓|✓|✓|✓|✓|✓|
| 30 | P-111552 | Screw |✓|✓|✓|✓|✓|✓|✓|✓|✓|✓|✓|✓|✓|✓|✓|✓|✓|✓|✓|✓|✓|✓|✓|✓|✓|✓|✓|✓|✓|✓|✓|✓|✓|✓|✓|✓|✓|✓|✓|✓|✓|✓|✓|✓|✓|✓|✓|✓|✓|✓|✓|✓|✓|✓|✓|✓|✓|✓|✓|✓|✓|✓|✓|✓|✓|✓|✓|✓|✓|✓|✓|✓|✓|✓|✓|✓|✓|
| 31 | P-151647 | Washer |✓|✓|✓|✓|✓|✓|✓|✓|✓|✓|✓|✓|✓|✓|✓|✓|✓|✓|✓|✓|✓|✓|✓|✓|✓|✓|✓|✓|✓|✓|✓|✓|✓|✓|✓|✓|✓|✓|✓|✓|✓|✓|✓|✓|✓|✓|✓|✓|✓|✓|✓|✓|✓|✓|✓|✓|✓|✓|✓|✓|✓|✓|✓|✓|✓|✓|✓|✓|✓|✓|✓|✓|✓|✓|✓|✓|✓|
| 32 | P-170360 | Cross Bar |✓|✓|✓|✓|✓|✓|✓|✓|✓|✓|✓|✓|✓|✓|✓|✓|✓|✓|✓|✓|✓|✓|✓|✓|✓|✓|✓|✓|✓|✓|✓|✓|✓|✓|✓|✓|✓|✓|✓|✓|✓|✓|✓|✓|✓|✓|✓|✓|✓|✓|✓|✓|✓|✓|✓|✓|✓|✓|✓|✓|✓|✓|✓|✓|✓|✓|✓|✓|✓|✓|✓|✓|✓|✓|✓|✓|✓|
| 33 | P-151647 | Washer |✓|✓|✓|✓|✓|✓|✓|✓|✓|✓|✓|✓|✓|✓|✓|✓|✓|✓|✓|✓|✓|✓|✓|✓|✓|✓|✓|✓|✓|✓|✓|✓|✓|✓|✓|✓|✓|✓|✓|✓|✓|✓|✓|✓|✓|✓|✓|✓|✓|✓|✓|✓|✓|✓|✓|✓|✓|✓|✓|✓|✓|✓|✓|✓|✓|✓|✓|✓|✓|✓|✓|✓|✓|✓|✓|✓|✓|
| 34 | P-170556 | Screw |✓|✓|✓|✓|✓|✓|✓|✓|✓|✓|✓|✓|✓|✓|✓|✓|✓|✓|✓|✓|✓|✓|✓|✓|✓|✓|✓|✓|✓|✓|✓|✓|✓|✓|✓|✓|✓|✓|✓|✓|✓|✓|✓|✓|✓|✓|✓|✓|✓|✓|✓|✓|✓|✓|✓|✓|✓|✓|✓|✓|✓|✓|✓|✓|✓|✓|✓|✓|✓|✓|✓|✓|✓|✓|✓|✓|✓|
| 35 | P-158333 | Stud |✓|✓|✓|✓|✓|✓|✓|✓|✓|✓|✓|✓| | | | | | | | | | | | | | | | | | | | | | | | | | | | | | | | | | | | | | | | | | | | | | | | | | | | | | | | | | | | | | | |
| 36 | P-146233 | Guard Plate (end) |✓|✓|✓|✓| |✓|✓|✓|✓|✓| | | | | | | | | | | | | | | | | | | | | | | | | | | | | | | | | | | | | | | | | | | | | | | | | | | | | | | | | | | | | | | | | |
| | P-146231 | Guard Plate (end) | | | | |✓| | | | | |✓|✓| | | | | | | | | | | | | | | | | | | | | | | | | | | | | | | | | | | | | | | | | | | | | | | | | | | | | | | | | | | | | |
| | P-146234 | Guard Plate (center) |✓|✓|✓|✓| |✓|✓|✓|✓|✓| | | | | | | | | | | | | | | | | | | | | | | | | | | | | | | | | | | | | | | | | | | | | | | | | | | | | | | | | | | | | | | | | |
| | P-146232 | Guard Plate (center) | | | | |✓| | | | | |✓|✓| | | | | | | | | | | | | | | | | | | | | | | | | | | | | | | | | | | | | | | | | | | | | | | | | | | | | | | | | | | | | |
| 37 | P-125951 | Screw |✓|✓|✓|✓|✓|✓|✓|✓|✓|✓|✓|✓| | | | | | | | | | | | | | | | | | | | | | | | | | | | | | | | | | | | | | | | | | | | | | | | | | | | | | | | | | | | | | |
| 38 | P-126336 | Washer | |✓| | | | |✓| | |✓| | | | | | | | | | | | | | | | | | | | | | | | | | | | | | | | | | | | | | | | | | | | | | | | | | | | | | | | | | | | | | | |
| 39 | P-125954 | Nut |✓|✓|✓|✓|✓|✓|✓|✓|✓|✓|✓|✓| | | | | | | | | | | | | | | | | | | | | | | | | | | | | | | | | | | | | | | | | | | | | | | | | | | | | | | | | | | | | | |
| 40 | P-143333 | Washer | |✓| | | | |✓| | |✓| | | | | | | | | | | | | | | | | | | | | | | | | | | | | | | | | | | | | | | | | | | | | | | | | | | | | | | | | | | | | | | |
| 41 | P-170186 | Guard Plate Assembly | | | | | | | | | | | | |✓|✓|✓|✓|✓|✓|✓|✓|✓|✓|✓|✓|✓|✓|✓|✓|✓|✓|✓|✓|✓|✓|✓|✓|✓|✓|✓|✓| | | |✓|✓|✓|✓|✓|✓|✓|✓|✓|✓|✓|✓|✓| | | | | | |✓|✓|✓|✓|✓|✓|✓|✓|✓| | | | | | |
| | P-170188 | Guard Plate Assembly | | | | | | | | | | | | | | | | | | | | | | | | | | | | | | | | | | | | | | | |✓|✓|✓| | | | | | | | | | | | | |✓|✓|✓|✓|✓|✓| | | | | | | | | |✓|✓|✓|✓|✓|✓|

DRIVE CODE - MISCELLANEOUS PARTS

| ITEM NO. | PIECE PART NUMBER | NAME | 1A | 1C | 1D | 1E | 2A | 3A | 3C | 3D | 3E | 3F | 4A | 4B | 17A | 17B | 17E | 18A | 18B | 18C | 18D | 18G | 18H | 18J | 19A | 19B | 19E | 20A | 20B | 20C | 20D | 20G | 20H | 21A | 21B | 21C | 21D | 21E | 21F | 21G |
|---|---|---|---|---|---|---|---|---|---|---|---|---|---|---|---|---|---|---|---|---|---|---|---|---|---|---|---|---|---|---|---|---|---|---|---|---|---|---|---|---|
| 42 | P-125954 | Nut |||||||||||||√|√|√|√|√|√|√|√|√|√|√|√|√|√|√|√|√|√|√|√|√|√|√|√|√|√|
| 43 | P-173238 | Gasket |√|√|√|√|√|√|√|√|√|√|√|√|√|√|√|√|√|√|√|√|√|√|√|√|√|√|√|√|√|√|√|√|√|√|√|√|√|√|
| 44 | P-137856 | Glass |√|√|√|√|√|√|√|√|√|√|√|√|√|√|√|√|√|√|√|√|√|√|√|√|√|√|√|√|√|√|√|√|√|√|√|√|√|√|
| 45 | P-137857 | Clamp Ring |√|√|√|√|√|√|√|√|√|√|√|√|√|√|√|√|√|√|√|√|√|√|√|√|√|√|√|√|√|√|√|√|√|√|√|√|√|√|
| 46 | P-147261 | Coupling Assembly |√|√||√|√|√|√|√|√|√|√|√|√|√|√|√|√|√|√|√|√|√|√|√|√|√|√|√|√|√|√|√|√|√||√|√|√|
| | P-154761 | Coupling Assembly (long shank) |||√||||||||||||||||||||||||||||||||√||||
| 47 | P-147282 | Pin |√|√|√|√|√|√|√|√|√|√|√|√|√|√|√|√|√|√|√|√|√|√|√|√|√|√|√|√|√|√|√|√|√|√|√|√|√|√|
| 48 | P-147261 | Coupling Assembly |√|√|√|√|√|√|√|√|√|√|√|√|√|√|√|√|√|√|√|√|√|√|√|√|√|√|√|√|√|√|√|√|√|√|√|√|√|√|
| 49 | 5/16"-18 x 3/8" | Bristo Set Screw-Cup Point |√|√|√|√|√|√|√|√|√|√|√|√|√|√|√|√|√|√|√|√|√|√|√|√|√|√|√|√|√|√|√|√|√|√|√|√|√|√|
| 50 | P-172198 | Washer |√|√|√|√|√|√|√|√|√|√|√|√|√|√|√|√|√|√|√|√|√|√|√|√|√|√|√|√|√|√|√|√|√|√|√|√|√|√|
| 51 | P-143623 | Nut |√|√|√|√|√|√|√|√|√|√|√|√|√|||√|√||||||√|||√|√|||||√|√|√|√||||
| 52 | P-147281 | Pipe Support |√|√|√|√|√|√|√|√|√|√|√|√|√|||√|√||||||√|||√|√|||||√|√|√|√||||
| 53 | P-154456 | Screw |√|√|√|√|√|√|√|√|√|√|√|√|√|||√|√||||||√|||√|√|||||√|√|√|√||||
| 54 | P-137906 | Screw |||||||||||||||||√||√||√|√|||||√||√||||||||||||
| 55 | P-137907 | Washer (steel) |||||||||||||||||√||√||√|√|||||√||√||||||||||||
| 56 | P-154578 | Coupling Assembly |||||||||||||||||√||√||√|√|||||√||√||||||||||||
| 57 | P-154494 | Pin |||||||||||||||||√||√||√|√|||||√||√||||||||||||
| 58 | P-137908 | Washer (phos. bronze) |||||||||||||||||√||√||√|√|||||√||√||||||||||||
| 59 | P-154513 | Screw ||||√|||||||||√|√|√|√|√|√|√|√|√|√|√|√|√|√|√|√|√|√|√||√||||√||
| 60 | P-65028 | Lock Washer ||||√|||||||||√|√|√|√|√|√|√|√|√|√|√|√|√|√|√|√|√|√|√||√||||√||
| 61 | P-154511 | Washer ||||√|||||||||√|√|√|√|√|√|√|√|√|√|√|√|√|√|√|√|√|√|√||√||||√||
| 62 | P-154512 | Washer ||||√|||||||||√|√|√|√|√|√|√|√|√|√|√|√|√|√|√|√|√|√|√||√||||√||
| 63 | P-143623 | Nut ||||√|||||||||√|√|√|√|√|√|√|√|√|√|√|√|√|√|√|√|√|√|√||√||||√||
| 64 | P-154136 | Bracket ||√|||||√||√|√|||||||||||||||||||||||||√||||√|
| 65 | P-125954 | Nut ||√|||||√||√|√|||||||||||||||||||||||||√||||√|
| 66 | P-154455 | Guard Plate ||√|||||√||√|√|||||||||||||||||||||||||√|||||
| | P-154504 | Guard Plate |||||||||||||√|√||√|√|√|√||||√|√||√|√|√|√||||||||||
| | P-170335 | Guard Plate |||||||||||||||√|||||√|√|√|||√|||||√|√||||||||
| | P-170336 | Guard Plate ||||||||||||||||||||||||||||||||||||||√|
| 67 | P-143623 | Nut ||√|||||√||√|√|||√|√|√|√|√|√|√|√|√|√|√|√|√|√|√|√|√|√|√|||√||||√|
| 68 | P-170065 | Screw ||√|||||√||√|√|||||||||||||||||||||||||√||||√|
| 69 | P-133449 | Screw ||√|||||√||√|√|||||||||||||||||||||||||√|||||
| | P-210215 | Screw ||||||||||||||||||||||||||||||||||||||√|
| 70 | P-154456 | Screw ||√|||||√||√|√|||√|√||√|√|√|√||||√|√||√|√|√|√|||||√|||||
| | P-160185 | Screw |||||||||||||||√|||||√|√|√|||√|||||√|√||||||||√|
| 71 | No. 5 | Taper Pin-.289"-1" Long |||||||||||||||||||||||||||||||||||||||
| 72 | DS-34885 Det. 1 | Shaft Extension |||||||||||||||||||||||||||||||||||||||
| 73 | P-400100 | Oil Guard |||√||||||||||||||||||||||||||||||||√||||
| | P-400101 | Oil Guard |√|√||√||√|√|√|√|√|||√|√|√|√|√|√|√|√|√|√|√|√|√|√|√|√|√|√|√|√|√|√||√|√|√|
| | P-400102 | Oil Guard |||||√||||||√|√||||||||||||||||||||||||||||
| 74 | P-170451 | Screw |||||||||||||√|√|||√|√|√|√|√||√|√|||√|√|√|√|√|||||√|√|√|

| ITEM NO. | PIECE PART NUMBER | NAME | 21H | 21R | 22A | 22B | 22C | 23A | 23B | 23C | 23D | 23F | 23G | 23H | 23J | 23K | 23L | 23T | 23U | 23W | 24A | 24B | 24C | 24D | 24E | 24F | 25A | 25B | 25E | 26A | 26B | 26C | 26D | 26G | 26H | 35A | 45A | 46A | 47A | 48A | 49A |
|---|---|---|---|---|---|---|---|---|---|---|---|---|---|---|---|---|---|---|---|---|---|---|---|---|---|---|---|---|---|---|---|---|---|---|---|---|---|---|---|---|---|
| 42 | P-125954 | Nut |√|√|√|√|√|√|√|√|√|√|√|√|√|√|√|√|√|√|√|√|√|√|√|√|√|√|√|√|√|√|√|√|√|√|√|√|√|√|√|
| 43 | P-173238 | Gasket |√|√|√|√|√|√|√|√|√|√|√|√|√|√|√|√|√|√|√|√|√|√|√|√|√|√|√|√|√|√|√|√|√|√|√|√|√|√|√|
| 44 | P-137856 | Glass |√|√|√|√|√|√|√|√|√|√|√|√|√|√|√|√|√|√|√|√|√|√|√|√|√|√|√|√|√|√|√|√|√|√|√|√|√|√|√|
| 45 | P-137857 | Clamp Ring |√|√|√|√|√|√|√|√|√|√|√|√|√|√|√|√|√|√|√|√|√|√|√|√|√|√|√|√|√|√|√|√|√|√|√|√|√|√|√|
| 46 | P-147261 | Coupling Assembly ||√|√|√|√|√|√|√|√|√|√|√|√|√|√|√|√||√|√|√|√|√|√|√|√|√|√|√|√|√|√|√|√|√|√|√|√|√|
| | P-154761 | Coupling Assembly (long shank) |√||||||||||||||||√|||||||||||||||||||||
| 47 | P-147282 | Pin |√|√|√|√|√|√|√|√|√|√|√|√|√|√|√|√|√|√|√|√|√|√|√|√|√|√|√|√|√|√|√|√|√|√|√|√|√|√|√|
| 48 | P-147261 | Coupling Assembly |√|√|√|√|√|√|√|√|√|√|√|√|√|√|√|√|√|√|√|√|√|√|√|√|√|√|√|√|√|√|√|√|√|√|√|√|√|√|√|
| 49 | 5/16"-18 x 3/8" | Bristo Set Screw-Cup Point |√|√|√|√|√|√|√|√|√|√|√|√|√|√|√|√|√|√|√|√|√|√|√|√|√|√|√|√|√|√|√|√|√|√|√|√|√|√|√|
| 50 | P-172198 | Washer |√|√|√|√|√|√|√|√|√|√|√|√|√|√|√|√|√|√|√|√|√|√|√|√|√|√|√|√|√|√|√|√|√|√|√|√|√|√|√|
| 51 | P-143623 | Nut |||√|√||√|√|√|√||||||||||√|√|√|√|√|||√|||√|√||||||||||
| 52 | P-147281 | Pipe Support |||√|√||√|√|√|√||||||||||√|√|√|√|√|||√|||√|√||||||||||
| 53 | P-154456 | Screw |||√|√||√|√|√|√||||||||||√|√|√|√|√|||√|||√|√||||||||||
| 54 | P-137906 | Screw ||||||||||||||||||||||||||||√||√||√|||||||
| 55 | P-137907 | Washer (steel) ||||||||||||||||||||||||||||√||√||√|||||||
| 56 | P-154578 | Coupling Assembly ||||||||||||||||||||||||||||√||√||√|||||||
| 57 | P-154494 | Pin ||||||||||||||||||||||||||||√||√|√|√|||||||
| 58 | P-137908 | Washer (phos. bronze) ||||||||||||||||||||||||||||√||√||√|||||||
| 59 | P-154513 | Screw ||||||||||||||||||||||||√|√|√|√|√|√|√|√|√|||||||
| 60 | P-65028 | Lock Washer ||||||||||||||||||||||||√|√|√|√|√|√|√|√|√|||||||
| 61 | P-154511 | Washer ||||||||||||||||||||||||√|√|√|√|√|√|√|√|√|||||||
| 62 | P-154512 | Washer ||||||||||||||||||||||||√|√|√|√|√|√|√|√|√|||||||
| 63 | P-143623 | Nut ||||||||||||||||||||||||√|√|√|√|√|√|√|√|√|||||||
| 64 | P-154136 | Bracket ||||||||√|√|√|||√|√|√||||||||||||||||||||||||
| 65 | P-125954 | Nut ||||||||√|√|√|||√|√|√||||||||||||||||||||||||
| 66 | P-154455 | Guard Plate ||||||||√|√|√|||√||||||||||||||||||||||||||
| | P-154504 | Guard Plate ||||||||||||||||||||||||√|√||√|√|√|√||||||||
| | P-170335 | Guard Plate ||||||||||||||||||||||||||√|||||√|√|||||||
| | P-170336 | Guard Plate ||||||||||||||√|√||||||||||||||||||||||||
| 67 | P-143623 | Nut ||||||||√|√|√|||√|√|√|||||||||√|√|√|√|√|√|√|√|√|||||||
| 68 | P-170065 | Screw ||||||||√|√|√|||√|√|√||||||||||||||||||||||||
| 69 | P-133449 | Screw ||||||||√|√|√|||√|√|||||||||||||||||||||||||
| | P-210215 | Screw ||||||||||||||√||||||||||||||||||||||||
| 70 | P-154456 | Screw ||||||||√|√|√|||√||||||||||√|√||√|√|√|√||||||||
| | P-160185 | Screw ||||||||||||||√|√|||||||||||√|||||√|√|||||||
| 71 | No. 5 | Taper Pin-.289"-1" Long |||||||||||||||||||||||||||||||||||√|√|√|√||
| 72 | DS-34885 Det. 1 | Shaft Extension |||||||||||||||||||||||||||||||||||√|√|√|√||
| 73 | P-400100 | Oil Guard |√|√||||||||||||||√|√|√|||||||||||||||||||||
| | P-400101 | Oil Guard ||||||√|√|√|√|√|√|√|√|√|√||||||||√|√|√|√|√|√|√|√|√|√|√||||||
| | P-400102 | Oil Guard |||√|√|√|||||||||||||||√|√|√|√|√|||||||||||||||
| 74 | P-170451 | Screw |√|√|||√||||||√|√|√|√|√|√|√||||||√|√||√|√|||√|√|√|√|√|√|√|√|√|√|

DRIVE CODE - MISCELLANEOUS PARTS

| ITEM NO. | PIECE PART NUMBER | NAME | 1A | 1C | 1D | 1E | 2A | 3A | 3C | 3D | 3E | 3F | 4A | 4B | 17A | 17B | 17E | 18A | 18B | 18C | 18D | 18G | 18H | 18J | 19A | 19B | 19E | 20A | 20B | 20C | 20D | 20G | 20H | 21A | 21B | 21C | 21D | 21E | 21F | 21G | 21H | 21R | 22A | 22B | 22C | 23A | 23B | 23C | 23D | 23F | 23G | 23H | 23J | 23K | 23L | 23T | 23U | 23W | 24A | 24B | 24C | 24D | 24E | 24F | 25A | 25B | 25E | 26A | 26B | 26C | 26D | 26G | 26H | 35A | 45A | 46A | 47A | 48A | 49A |
|---|---|---|---|---|---|---|---|---|---|---|---|---|---|---|---|---|---|---|---|---|---|---|---|---|---|---|---|---|---|---|---|---|---|---|---|---|---|---|---|---|---|---|---|---|---|---|---|---|---|---|---|---|---|---|---|---|---|---|---|---|---|---|---|---|---|---|---|---|---|---|---|---|---|---|---|---|---|---|---|
| | P-170450 | Guard |  |  |  |  |  |  |  |  |  |  |  |  |  |  |  |  |  |  |  |  |  |  |  |  |  |  |  |  |  |  |  |  |  |  |  |  |  |  |  |  |  |  |  |  |  |  |  |  |  |  |  |  |  |  |  |  |  |  |  |  |  |  |  |  |  |  |  |  |  |  | √ | √ | √ | √ |  |
| 75 | P-170527 | Guard |  |  |  |  |  |  |  |  |  |  |  |  |  | √ | √ |  |  | √ | √ | √ | √ | √ |  | √ | √ |  |  | √ | √ | √ | √ |  |  |  |  | √ | √ | √ | √ |  |  |  | √ |  |  |  |  |  | √ | √ | √ | √ | √ |  | √ |  |  |  |  |  | √ | √ |  | √ | √ |  |  | √ | √ | √ | √ | √ |  |  |  |  | √ |
| | P-170550 | Guard |  |  |  |  |  |  |  |  |  |  |  |  |  |  |  |  |  |  |  |  |  |  |  |  |  |  |  |  |  |  |  |  |  |  |  |  |  | √ |  |  |  |  |  |  |  |  |  |  |  |  |  | √ |  |  |  |  |  |  |  |  |  |  |  |  |  |  |  |  |  |  |  |  |  |  |  |

DRIVE CODE - GEARCASE - WORM END (ALSO NON WORM END OF CONVERTED DRIVES)

| ITEM NO. | PIECE PART NUMBER | NAME | 1A | 1C | 1D | 1E | 2A | 3A | 3C | 3D | 3E | 3F | 4A | 4B | 17A | 17B | 17E | 18A | 18B | 18C | 18D | 18G | 18H | 18J | 19A | 19B | 19E | 20A | 20B | 20C | 20D | 20G | 20H | 21A | 21B | 21C | 21D | 21E | 21F | 21G | 21H | 21R | 22A | 22B | 22C | 23A | 23B | 23C | 23D | 23F | 23G | 23H | 23J | 23K | 23L | 23T | 23U | 23W | 24A | 24B | 24C | 24D | 24E | 24F | 25A | 25B | 25E | 26A | 26B | 26C | 26D | 26G | 26H | 35A | 45A | 46A | 47A | 48A | 49A |
|---|---|---|---|---|---|---|---|---|---|---|---|---|---|---|---|---|---|---|---|---|---|---|---|---|---|---|---|---|---|---|---|---|---|---|---|---|---|---|---|---|---|---|---|---|---|---|---|---|---|---|---|---|---|---|---|---|---|---|---|---|---|---|---|---|---|---|---|---|---|---|---|---|---|---|---|---|---|---|---|
| 100 | P-170275 | Screw |  |  |  |  |  |  |  |  |  |  |  |  |  |  |  |  |  |  |  |  |  |  |  |  |  |  |  |  |  |  |  |  |  |  |  |  |  |  |  |  |  |  |  |  |  |  |  |  |  |  |  |  |  |  |  |  |  |  |  |  |  |  |  |  |  |  |  |  |  |  | √ | √ | √ | √ |  |
| 101 | P-154517 | Governor Cover | √ | √ | √ | √ | √ | √ | √ | √ | √ | √ | √ | √ | √ |  |  | √ | √ |  |  |  |  |  | √ |  |  | √ | √ |  |  |  |  | √ | √ | √ | √ |  |  |  |  |  | √ |  |  | √ | √ | √ | √ | √ |  |  |  |  |  |  |  | √ | √ | √ |  |  |  |  | √ |  |  | √ | √ |  |  |  |  |  |  |  |  |  |  |
| 102 | P-137236 | Contact Spring | √ | √ | √ | √ | √ | √ | √ | √ | √ | √ | √ | √ | √ |  |  | √ | √ |  |  |  |  |  | √ |  |  | √ | √ |  |  |  |  | √ | √ | √ | √ |  |  |  |  |  | √ |  |  | √ | √ | √ | √ | √ |  |  |  |  |  |  |  | √ | √ | √ |  |  |  |  | √ |  |  | √ | √ |  |  |  |  |  |  |  |  |  |  |
| 103 | P-136681 | Screw | √ | √ | √ | √ | √ | √ | √ | √ | √ | √ | √ | √ | √ |  |  | √ | √ |  |  |  |  |  | √ |  |  | √ | √ |  |  |  |  | √ | √ | √ | √ |  |  |  |  |  | √ |  |  | √ | √ | √ | √ | √ |  |  |  |  |  |  |  | √ | √ | √ |  |  |  |  | √ |  |  | √ | √ |  |  |  |  |  |  |  |  |  |  |
| 104 | P-147266 | Governor | √ | √ | √ | √ | √ | √ | √ | √ | √ | √ | √ | √ | √ |  |  | √ | √ |  |  |  |  |  | √ |  |  | √ | √ |  |  |  |  | √ | √ | √ | √ |  |  |  |  |  | √ |  |  | √ | √ | √ | √ | √ |  |  |  |  |  |  |  | √ | √ | √ |  |  |  |  | √ |  |  | √ | √ |  |  |  |  |  |  |  |  |  |  |
| 105 | 1/16"x1/4" | Cotter Pin (steel) | √ | √ | √ | √ | √ | √ | √ | √ | √ | √ | √ | √ | √ |  |  | √ | √ |  |  |  |  |  | √ |  |  | √ | √ |  |  |  |  | √ | √ | √ | √ |  |  |  |  |  | √ |  |  | √ | √ | √ | √ | √ |  |  |  |  |  |  |  | √ | √ | √ |  |  |  |  | √ |  |  | √ | √ |  |  |  |  |  |  |  |  |  |  |
| 106 | P-147279 | Pin | √ | √ | √ | √ | √ | √ | √ | √ | √ | √ | √ | √ | √ |  |  | √ | √ |  |  |  |  |  | √ |  |  | √ | √ |  |  |  |  | √ | √ | √ | √ |  |  |  |  |  | √ |  |  | √ | √ | √ | √ | √ |  |  |  |  |  |  |  | √ | √ | √ |  |  |  |  | √ |  |  | √ | √ |  |  |  |  |  |  |  |  |  |  |
| 107 | P-159215 | Spring | √ | √ | √ | √ | √ | √ | √ | √ | √ | √ | √ | √ | √ |  |  | √ | √ |  |  |  |  |  | √ |  |  | √ | √ |  |  |  |  | √ | √ | √ | √ |  |  |  |  |  | √ |  |  | √ | √ | √ | √ | √ |  |  |  |  |  |  |  | √ | √ | √ |  |  |  |  | √ |  |  | √ | √ |  |  |  |  |  |  |  |  |  |  |
| 108 | P-154518 | Governor Cover and Contact Spring Assembly | √ | √ | √ | √ | √ | √ | √ | √ | √ | √ | √ | √ | √ |  |  | √ | √ |  |  |  |  |  | √ |  |  | √ | √ |  |  |  |  | √ | √ | √ | √ |  |  |  |  |  | √ |  |  | √ | √ | √ | √ | √ |  |  |  |  |  |  |  | √ | √ | √ |  |  |  |  | √ |  |  | √ | √ |  |  |  |  |  |  |  |  |  |  |
| 109 | P-132308 | Insulator | √ | √ | √ | √ | √ | √ | √ | √ | √ | √ | √ | √ | √ |  |  | √ | √ |  |  |  |  |  | √ |  |  | √ | √ |  |  |  |  | √ | √ | √ | √ |  |  |  |  |  | √ |  |  | √ | √ | √ | √ | √ |  |  |  |  |  |  |  | √ | √ | √ |  |  |  |  | √ |  |  | √ | √ |  |  |  |  |  |  |  |  |  |  |
| 110 | P-107095 | Bushing | √ | √ | √ | √ | √ | √ | √ | √ | √ | √ | √ | √ | √ |  |  | √ | √ |  |  |  |  |  | √ |  |  | √ | √ |  |  |  |  | √ | √ | √ | √ |  |  |  |  |  | √ |  |  | √ | √ | √ | √ | √ |  |  |  |  |  |  |  | √ | √ | √ |  |  |  |  | √ |  |  | √ | √ |  |  |  |  |  |  |  |  |  |  |
| 111 | P-130428 | Clamping Plate | √ | √ | √ | √ | √ | √ | √ | √ | √ | √ | √ | √ | √ |  |  | √ | √ |  |  |  |  |  | √ |  |  | √ | √ |  |  |  |  | √ | √ | √ | √ |  |  |  |  |  | √ |  |  | √ | √ | √ | √ | √ |  |  |  |  |  |  |  | √ | √ | √ |  |  |  |  | √ |  |  | √ | √ |  |  |  |  |  |  |  |  |  |  |
| 112 | P-137237 | Stop Spring | √ | √ | √ | √ | √ | √ | √ | √ | √ | √ | √ | √ | √ |  |  | √ | √ |  |  |  |  |  | √ |  |  | √ | √ |  |  |  |  | √ | √ | √ | √ |  |  |  |  |  | √ |  |  | √ | √ | √ | √ | √ |  |  |  |  |  |  |  | √ | √ | √ |  |  |  |  | √ |  |  | √ | √ |  |  |  |  |  |  |  |  |  |  |
| 113 | P-154382 | Cover | √ | √ | √ | √ | √ | √ | √ | √ | √ | √ | √ | √ | √ |  |  | √ | √ |  |  |  |  |  | √ |  |  | √ | √ |  |  |  |  | √ | √ | √ | √ |  |  |  |  |  | √ |  |  | √ | √ | √ | √ | √ |  |  |  |  |  |  |  | √ | √ | √ |  |  |  |  | √ |  |  | √ | √ |  |  |  |  |  |  |  |  |  |  |
| 114 | P-147270 | Contact Spring | √ | √ | √ | √ | √ | √ | √ | √ | √ | √ | √ | √ | √ |  |  | √ | √ |  |  |  |  |  | √ |  |  | √ | √ |  |  |  |  | √ | √ | √ | √ |  |  |  |  |  | √ |  |  | √ | √ | √ | √ | √ |  |  |  |  |  |  |  | √ | √ | √ |  |  |  |  | √ |  |  | √ | √ |  |  |  |  |  |  |  |  |  |  |
| 115 | P-147276 | Pin | √ | √ | √ | √ | √ | √ | √ | √ | √ | √ | √ | √ | √ |  |  | √ | √ |  |  |  |  |  | √ |  |  | √ | √ |  |  |  |  | √ | √ | √ | √ |  |  |  |  |  | √ |  |  | √ | √ | √ | √ | √ |  |  |  |  |  |  |  | √ | √ | √ |  |  |  |  | √ |  |  | √ | √ |  |  |  |  |  |  |  |  |  |  |
| 116 | 1/16"x5/16" | Cotter Pin (steel) | √ | √ | √ | √ | √ | √ | √ | √ | √ | √ | √ | √ | √ |  |  | √ | √ |  |  |  |  |  | √ |  |  | √ | √ |  |  |  |  | √ | √ | √ | √ |  |  |  |  |  | √ |  |  | √ | √ | √ | √ | √ |  |  |  |  |  |  |  | √ | √ | √ |  |  |  |  | √ |  |  | √ | √ |  |  |  |  |  |  |  |  |  |  |
| 117 | P-147283 | Screw | √ | √ | √ | √ | √ | √ | √ | √ | √ | √ | √ | √ | √ |  |  | √ | √ |  |  |  |  |  | √ |  |  | √ | √ |  |  |  |  | √ | √ | √ | √ |  |  |  |  |  | √ |  |  | √ | √ | √ | √ | √ |  |  |  |  |  |  |  | √ | √ | √ |  |  |  |  | √ |  |  | √ | √ |  |  |  |  |  |  |  |  |  |  |
| 118 | P-170156 | Contact Spring |  |  |  |  |  |  |  |  |  |  |  |  |  | √ | √ |  |  | √ | √ | √ | √ | √ |  | √ | √ |  |  | √ | √ | √ | √ |  |  |  |  | √ | √ | √ | √ | √ |  | √ | √ |  |  |  |  |  | √ | √ | √ | √ | √ | √ | √ |  |  |  | √ | √ | √ | √ |  | √ | √ |  |  | √ | √ | √ | √ | √ | √ | √ | √ | √ | √ |
| 119 | P-170046 | Contact Spring |  |  |  |  |  |  |  |  |  |  |  |  |  | √ | √ |  |  | √ | √ | √ | √ | √ |  | √ | √ |  |  | √ | √ | √ | √ |  |  |  |  | √ | √ | √ | √ | √ |  | √ | √ |  |  |  |  |  | √ | √ | √ | √ | √ | √ | √ |  |  |  | √ | √ | √ | √ |  | √ | √ |  |  | √ | √ | √ | √ | √ | √ | √ | √ | √ | √ |
| 120 | P-132308 | Insulator |  |  |  |  |  |  |  |  |  |  |  |  |  | √ | √ |  |  | √ | √ | √ | √ | √ |  | √ | √ |  |  | √ | √ | √ | √ |  |  |  |  | √ | √ | √ | √ | √ |  | √ | √ |  |  |  |  |  | √ | √ | √ | √ | √ | √ | √ |  |  |  | √ | √ | √ | √ |  | √ | √ |  |  | √ | √ | √ | √ | √ | √ | √ | √ | √ | √ |
| 121 | P-137237 | Stop Spring |  |  |  |  |  |  |  |  |  |  |  |  |  | √ | √ |  |  | √ | √ | √ | √ | √ |  | √ | √ |  |  | √ | √ | √ | √ |  |  |  |  | √ | √ | √ | √ | √ |  | √ | √ |  |  |  |  |  | √ | √ | √ | √ | √ | √ | √ |  |  |  | √ | √ | √ | √ |  | √ | √ |  |  | √ | √ | √ | √ | √ | √ | √ | √ | √ | √ |
| 122 | P-170158 | Housing and Contact Spring Assembly |  |  |  |  |  |  |  |  |  |  |  |  |  | √ | √ |  |  | √ | √ | √ | √ | √ |  | √ | √ |  |  | √ | √ | √ | √ |  |  |  |  | √ | √ | √ | √ | √ |  | √ | √ |  |  |  |  |  | √ | √ | √ | √ | √ | √ | √ |  |  |  | √ | √ | √ | √ |  | √ | √ |  |  | √ | √ | √ | √ | √ | √ | √ | √ | √ | √ |
| 123 | P-170152 | Governor |  |  |  |  |  |  |  |  |  |  |  |  |  | √ | √ |  |  | √ | √ | √ | √ | √ |  | √ | √ |  |  | √ | √ | √ | √ |  |  |  |  | √ | √ | √ | √ | √ |  | √ | √ |  |  |  |  |  | √ | √ | √ | √ | √ | √ | √ |  |  |  | √ | √ | √ | √ |  | √ | √ |  |  | √ | √ | √ | √ | √ | √ | √ | √ | √ | √ |
| 124 | P-170149 | Spring |  |  |  |  |  |  |  |  |  |  |  |  |  | √ | √ |  |  | √ | √ | √ | √ | √ |  | √ | √ |  |  | √ | √ | √ | √ |  |  |  |  | √ | √ | √ | √ | √ |  | √ | √ |  |  |  |  |  | √ | √ | √ | √ | √ | √ | √ |  |  |  | √ | √ | √ | √ |  | √ | √ |  |  | √ | √ | √ | √ | √ | √ | √ | √ | √ | √ |
| 125 | P-130428 | Clamping Plate |  |  |  |  |  |  |  |  |  |  |  |  |  | √ | √ |  |  | √ | √ | √ | √ | √ |  | √ | √ |  |  | √ | √ | √ | √ |  |  |  |  | √ | √ | √ | √ | √ |  | √ | √ |  |  |  |  |  | √ | √ | √ | √ | √ | √ | √ |  |  |  | √ | √ | √ | √ |  | √ | √ |  |  | √ | √ | √ | √ | √ | √ | √ | √ | √ | √ |
| 126 | P-136681 | Screw |  |  |  |  |  |  |  |  |  |  |  |  |  | √ | √ |  |  | √ | √ | √ | √ | √ |  | √ | √ |  |  | √ | √ | √ | √ |  |  |  |  | √ | √ | √ | √ | √ |  | √ | √ |  |  |  |  |  | √ | √ | √ | √ | √ | √ | √ |  |  |  | √ | √ | √ | √ |  | √ | √ |  |  | √ | √ | √ | √ | √ | √ | √ | √ | √ | √ |
| 127 | P-107095 | Bushing |  |  |  |  |  |  |  |  |  |  |  |  |  | √ | √ |  |  | √ | √ | √ | √ | √ |  | √ | √ |  |  | √ | √ | √ | √ |  |  |  |  | √ | √ | √ | √ | √ |  | √ | √ |  |  |  |  |  | √ | √ | √ | √ | √ | √ | √ |  |  |  | √ | √ | √ | √ |  | √ | √ |  |  | √ | √ | √ | √ | √ | √ | √ | √ | √ | √ |
| 128 | P-170151 | Screw |  |  |  |  |  |  |  |  |  |  |  |  |  | √ | √ |  |  | √ | √ | √ | √ | √ |  | √ | √ |  |  | √ | √ | √ | √ |  |  |  |  | √ | √ | √ | √ | √ |  | √ | √ |  |  |  |  |  | √ | √ | √ | √ | √ | √ | √ |  |  |  | √ | √ | √ | √ |  | √ | √ |  |  | √ | √ | √ | √ | √ | √ | √ | √ | √ | √ |

| ITEM NO. | PIECE PART NUMBER | NAME | DRIVE CODE - GEARCASE - WORM END (ALSO NON WORM END OF CONVERTED DRIVES) | | | | | | | | | | | | | | | | | | | | | | | | | | | | | | | | | | | | | | | | | | | | | | | | | | | | | | | | | | | | | | | | | | | | | | | | | | |
|---|---|---|---|---|---|---|---|---|---|---|---|---|---|---|---|---|---|---|---|---|---|---|---|---|---|---|---|---|---|---|---|---|---|---|---|---|---|---|---|---|---|---|---|---|---|---|---|---|---|---|---|---|---|---|---|---|---|---|---|---|---|---|---|---|---|---|---|---|---|---|---|---|---|---|---|---|---|---|---|
| | | | 1A | 1C | 1D | 1E | 2A | 3A | 3C | 3D | 3E | 3F | 4A | 4B | 17A | 17B | 17E | 18A | 18B | 18C | 18D | 18G | 18H | 18J | 19A | 19B | 19E | 20A | 20B | 20C | 20D | 20G | 20H | 21A | 21B | 21C | 21D | 21E | 21F | 21G | 21H | 21R | 22A | 22B | 22C | 23A | 23B | 23C | 23D | 23F | 23G | 23H | 23J | 23K | 23L | 23T | 23U | 23W | 24A | 24B | 24C | 24D | 24E | 24F | 25A | 25B | 25E | 26A | 26B | 26C | 26D | 26G | 26H | 35A | 45A | 46A | 47A | 48A | 49A |
| 129 | P-154117 | Tube - 1/4" (front) | √ | √ | √ | √ | | √ | √ | √ | √ | √ | | | | | | | | | | | | | | | | | | | | | | √ | √ | √ | √ | | | | | | | | | √ | √ | √ | √ | √ | | | | | | | | √ | | | | | | | | | | | | | | | | | | | | | |
| | P-154079 | Tube - 1/4" (front) | | | | | √ | | | | | | √ | √ | | | | | | | | | | | | | | | | | | | | | | | | | | | | | √ | √ | | | | | | | | | | | | | | | √ | √ | √ | √ | | | √ | | | √ | √ | | | | | | | | | | |
| | P-154507 | Tube - 1/4" (front) | | | | | | | | | | | | | √ | | | √ | √ | | | | | | √ | | | √ | √ | | | | | | | | | | | | | | | | | | | | | | | | | | | | | | | | | | | | | | | | | | | | | | | | | |
| | P-154117 | Tube - 1/4" (rear) | √ | √ | √ | √ | | | | √ | √ | | | | | | | | | | | | | | | | | | | | | | | √ | √ | √ | √ | | | | | | | | | | √ | | √ | | | | | | | | | √ | | | | | | | | | | | | | | | | | | | | | |
| | P-154079 | Tube - 1/4" (rear) | | | | | √ | | | | | | | √ | | | | | | | | | | | | | | | | | | | | | | | | | | | | | √ | √ | | | | | | | | | | | | | | | | √ | | √ | | | | | | | | | | | | | | | | | |
| | P-154119 | Tube - 1/4" (rear) | | | | | | √ | √ | | | √ | | | | | | | | | | | | | | | | | | | | | | | | | | | | | | | | | | √ | | √ | | √ | | | | | | | | | | | | | | | | | | | | | | | | | | | | | |
| | P-154082 | Tube - 1/4" (rear) | | | | | | | | | | | √ | | | | | | | | | | | | | | | | | | | | | | | | | | | | | | | | | | | | | | | | | | | | | | √ | | √ | | | | | | | | | | | | | | | | | | |
| | P-154507 | Tube - 1/4" (rear) | | | | | | | | | | | | | √ | | | | √ | | | | | | √ | | | | √ | | | | | | | | | | | | | | | | | | | | | | | | | | | | | | | | | | | | √ | | | | √ | | | | | | | | | | |
| | P-154508 | Tube - 1/4" (rear) | | | | | | | | | | | | | | | | √ | | | | | | | | | | √ | | | | | | | | | | | | | | | | | | | | | | | | | | | | | | | | | | | | | | | | √ | | | | | | | | | | | |
| 130 | 69F | Elbow Assembly - 1/8" Male Thread | √ | √ | √ | √ | √ | √ | √ | √ | √ | √ | √ | √ | √ | | | √ | √ | | | | | | √ | | | √ | √ | | | | | √ | √ | √ | √ | | | | | | √ | √ | | √ | √ | √ | √ | √ | | | | | | | | √ | √ | √ | √ | √ | | | √ | | | √ | √ | | | | | | | | | | |
| 131 | P-170228 | Elbow Assembly - 3/8" Male Thread | √ | √ | √ | √ | √ | √ | √ | √ | √ | √ | √ | √ | √ | | | √ | √ | | | | | | √ | | | √ | √ | | | | | √ | √ | √ | √ | | | | | | √ | √ | | √ | √ | √ | √ | √ | | | | | | | | √ | √ | √ | √ | √ | | | √ | | | √ | √ | | | | | | | | | | |
| 132 | P-154123 | Tube - 1/2" (front) | √ | √ | √ | √ | | √ | √ | √ | √ | √ | | | | | | | | | | | | | | | | | | | | | | | | | | | | | | | | | | | | | | | | | | | | | | | | | | | | | | | | | | | | | | | | | | | |
| | P-154085 | Tube - 1/2" (front) | | | | | √ | | | | | | √ | √ | | | | | | | | | | | | | | | | | | | | | | | | | | | | | | | | | | | | | | | | | | | | | | | | | | | | | | | | | | | | | | | | | |
| | P-154509 | Tube - 1/2" (front) | | | | | | | | | | | | | √ | | | √ | √ | | | | | | √ | | | √ | √ | | | | | | | | | | | | | | | | | | | | | | | | | | | | | | | | | | | | √ | | | √ | √ | | | | | | | | | | |
| | P-154744 | Tube - 1/2" (front) | | | | | | | | | | | | | | | | | | | | | | | | | | | | | | | | √ | √ | √ | √ | | | | | | | | | √ | √ | √ | √ | √ | | | | | | | | √ | | | | | | | | | | | | | | | | | | | | | |
| | P-154745 | Tube - 1/2" (front) | | | | | | | | | | | | | | | | | | | | | | | | | | | | | | | | | | | | | | | | | √ | √ | | | | | | | | | | | | | | | √ | √ | √ | √ | | | | | | | | | | | | | | | | | |
| | P-154123 | Tube - 1/2" (rear) | √ | √ | √ | √ | | | | √ | √ | | | | | | | | | | | | | | | | | | | | | | | | | | | | | | | | | | | | | | | | | | | | | | | | | | | | | | | | | | | | | | | | | | | | |
| | P-154085 | Tube - 1/2" (rear) | | | | | √ | | | | | | | √ | | | | | | | | | | | | | | | | | | | | | | | | | | | | | | | | | | | | | | | | | | | | | | | | | | | | | | | | | | | | | | | | | |
| | P-154124 | Tube - 1/2" (rear) | | | | | | √ | √ | | | √ | | | | | | | | | | | | | | | | | | | | | | | | | | | | | | | | | | √ | | √ | | √ | | | | | | | | | | | | | | | | | | | | | | | | | | | | | |
| | P-154088 | Tube - 1/2" (rear) | | | | | | | | | | | √ | | | | | | | | | | | | | | | | | | | | | | | | | | | | | | | | | | | | | | | | | | | | | | √ | | √ | | | | | | | | | | | | | | | | | | |
| | P-154509 | Tube - 1/2" (rear) | | | | | | | | | | | | | √ | | | | √ | | | | | | √ | | | | √ | | | | | | | | | | | | | | | | | | | | | | | | | | | | | | | | | | | | √ | | | | √ | | | | | | | | | | |
| | P-154510 | Tube - 1/2" (rear) | | | | | | | | | | | | | | | | √ | | | | | | | | | | √ | | | | | | | | | | | | | | | | | | | | | | | | | | | | | | | | | | | | | | | | √ | | | | | | | | | | | |
| | P-154744 | Tube - 1/2" (rear) | | | | | | | | | | | | | | | | | | | | | | | | | | | | | | | | √ | √ | √ | √ | | | | | | | | | | √ | | √ | | | | | | | | | √ | | | | | | | | | | | | | | | | | | | | | |
| | P-154745 | Tube - 1/2" (rear) | | | | | | | | | | | | | | | | | | | | | | | | | | | | | | | | | | | | | | | | | √ | √ | | | | | | | | | | | | | | | | √ | | √ | | | | | | | | | | | | | | | | | |
| 133 | P-147208 | Gear Case Cover (upper) | | | | | √ | | | | | | √ | √ | | | | | | | | | | | | | | | | | | | | | | | | | | | | | | | | | | | | | | | | | | | | | | | | | | | | | | | | | | | | | | | | | |
| | P-147213 | Gear Case Cover (upper) | √ | √ | √ | √ | | √ | √ | √ | √ | √ | | | | | | | | | | | | | | | | | | | | | | | | | | | | | | | | | | | | | | | | | | | | | | | | | | | | | | | | | | | | | | | | | | |
| | P-154389 | Gear Case Cover (upper) | | | | | | | | | | | | | | | | | | | | | | | | | | | | | | | | | | | | | | | | | √ | √ | | | | | | | | | | | | | | | √ | √ | √ | √ | | | | | | | | | | | | | | | | | |
| | P-170574 | Gear Case Cover (upper) | | | | | | | | | | | | | √ | | | √ | √ | | | | | | √ | | | √ | √ | | | | | √ | √ | √ | √ | | | | | | | | | √ | √ | √ | √ | √ | | | | | | | | √ | | | | | | | √ | | | √ | √ | | | | | | | | | | |
| | P-170211 | Gear Case Cover (upper) | | | | | | | | | | | | | | √ | √ | | | √ | √ | √ | √ | √ | | √ | √ | | | √ | √ | √ | √ | | | | | √ | √ | √ | √ | | | | | | | | | | √ | √ | √ | √ | √ | | | | | | | | | | | √ | √ | | | √ | √ | √ | √ | | | | | | |
| | P-170234 | Gear Case Cover (upper) | | | | | | | | | | | | | | | | | | | | | | | | | | | | | | | | | | | | | | | | | | | √ | | | | | | | | | | | | | | | | | | √ | √ | | | | | | | | | | | | | | | |
| | P-170375 | Gear Case Cover (upper) | | | | | | | | | | | | | | | | | | | | | | | | | | | | | | | | | | | | | | | | | | | | | | | | | | | | | | | | | | | | | | | | | | | | | | | √ | | | | | √ |
| | P-170549 | Gear Case Cover (upper) | | | | | | | | | | | | | | | | | | | | | | | | | | | | | | | | | | | | | | | | √ | | | | | | | | | | | | | | √ | √ | | | | | | | | | | | | | | | | | | | | | | |
| | P-170561 | Gear Case Cover (upper) | | | | | | | | | | | | | | | | | | | | | | | | | | | | | | | | | | | | | | | | | | | | | | | | | | | | | | | | | | | | | | | | | | | | | | | | √ | √ | | | |
| | P-170563 | Gear Case Cover (upper) | | | | | | | | | | | | | | | | | | | | | | | | | | | | | | | | | | | | | | | | | | | | | | | | | | | | | | | | | | | | | | | | | | | | | | | | | | √ | √ | |
| 134 | P-170282 | Screw | | | | | | | | | | | | | √ | √ | √ | √ | √ | √ | √ | √ | √ | √ | √ | √ | √ | √ | √ | √ | √ | √ | √ | √ | √ | √ | √ | √ | √ | √ | √ | √ | | | | √ | √ | √ | √ | √ | √ | √ | √ | √ | √ | √ | √ | √ | | | | | | | √ | √ | √ | √ | √ | √ | √ | √ | √ | √ | | | | | √ |
| 135 | P-143360 | Screw | √ | √ | √ | √ | √ | √ | √ | √ | √ | √ | √ | √ | √ | | | √ | √ | | | | | | √ | | | √ | √ | | | | | √ | √ | √ | √ | | | | | | √ | √ | | √ | √ | √ | √ | √ | | | | | | | | √ | √ | √ | √ | √ | | | √ | | | √ | √ | | | | | | | | | | |
| 136 | P-147273 | Pin | √ | √ | √ | √ | √ | √ | √ | √ | √ | √ | √ | √ | √ | √ | √ | √ | √ | √ | √ | √ | √ | √ | √ | √ | √ | √ | √ | √ | √ | √ | √ | √ | √ | √ | √ | √ | √ | √ | √ | √ | √ | √ | √ | √ | √ | √ | √ | √ | √ | √ | √ | √ | √ | √ | √ | √ | √ | √ | √ | √ | √ | √ | √ | √ | √ | √ | √ | √ | √ | √ | √ | √ | | | | | √ |
| 137 | P-201421 | Screw | √ | √ | √ | √ | √ | √ | √ | √ | √ | √ | √ | √ | √ | | | √ | √ | | | | | | √ | | | √ | √ | | | | | √ | √ | √ | √ | | | | | | √ | √ | | √ | √ | √ | √ | √ | | | | | | | | | √ | √ | √ | √ | | | √ | | | √ | √ | | | | | | | | | | |
| | P-170280 | Screw | | | | | | | | | | | | | | √ | √ | | | √ | √ | √ | √ | √ | | √ | √ | | | √ | √ | √ | √ | | | | | √ | √ | √ | √ | √ | | | √ | | | | | | √ | √ | √ | √ | √ | √ | √ | √ | | | | | √ | √ | | √ | √ | | | √ | √ | √ | √ | √ | | | | | √ |
| 138 | P-147222 | Roll Guard | √ | √ | √ | √ | √ | √ | √ | √ | √ | √ | √ | √ | | | | | | | | | | | | | | | | | | | | | | | | | | | | | | | | | | | | | | | | | | | | | | | | | | | | | | | | | | | | | | | | | | | |
| | P-154451 | Roll Guard | | | | | | | | | | | | | | | | | | | | | | | | | | | | | | | | | | | | | | | | √ | | | | | | | | | | | | | | √ | √ | | | | | | | | | | | | | | | | | | | | | | |
| | P-170506 | Roll Guard | | | | | | | | | | | | | √ | √ | √ | √ | √ | √ | √ | √ | √ | √ | √ | √ | √ | √ | √ | √ | √ | √ | √ | √ | √ | √ | √ | √ | √ | √ | √ | | √ | √ | √ | √ | √ | √ | √ | √ | √ | √ | √ | √ | √ | | | √ | √ | √ | √ | √ | √ | √ | √ | √ | √ | √ | √ | √ | √ | √ | √ | √ | | | | | |
| 139 | P-170509 | Washer | | | | | | | | | | | | | √ | √ | √ | √ | √ | √ | √ | √ | √ | √ | √ | √ | √ | √ | √ | √ | √ | √ | √ | √ | √ | √ | √ | √ | √ | √ | √ | | √ | √ | √ | √ | √ | √ | √ | √ | √ | √ | √ | √ | √ | | | √ | √ | √ | √ | √ | √ | √ | √ | √ | √ | √ | √ | √ | √ | √ | √ | √ | | | | | |

DRIVE CODE - GEARCASE - WORM END (ALSO NON WORM END OF CONVERTED DRIVES)

| Item No. | Piece Part Number | Name | 1A | 1C | 1D | 1E | 2A | 3A | 3C | 3D | 3E | 3F | 4A | 4B | 17A | 17B | 17E | 18A | 18B | 18C | 18D | 18G | 18H | 18J | 19A | 19B | 19E | 20A | 20B | 20C | 20D | 20G | 20H | 21A | 21B | 21C | 21D | 21E | 21F | 21G | 21H | 21R | 22A | 22B | 22C | 23A | 23B | 23C | 23D | 23F | 23G | 23H | 23J | 23K | 23L | 23T | 23U | 23W | 24A | 24B | 24C | 24D | 24E | 24F | 25A | 25B | 25E | 26A | 26B | 26C | 26D | 26G | 26H | 35A | 45A | 46A | 47A | 48A | 49A |
|---|---|---|---|---|---|---|---|---|---|---|---|---|---|---|---|---|---|---|---|---|---|---|---|---|---|---|---|---|---|---|---|---|---|---|---|---|---|---|---|---|---|---|---|---|---|---|---|---|---|---|---|---|---|---|---|---|---|---|---|---|---|---|---|---|---|---|---|---|---|---|---|---|---|---|---|---|---|---|---|
| 140 | P-251235 | Nut |√|√|√|√|√|√|√|√|√|√|√|√|√|√|√|√|√|√|√|√|√|√|√|√|√|√|√|√|√|√|√|√|√|√|√|√|√|√|√|√|√|√|√|√|√|√|√|√|√|√|√|√|√|√|√|√|√|√|√|√|√|√|√|√|√|√|√|√|√|√|√|√| | | | | |
| | P-478854 | Stud |√|√|√|√|√|√|√|√|√|√|√|√|√|√|√|√|√|√|√|√|√|√|√|√|√|√|√|√|√|√|√|√|√|√|√|√|√|√|√|√|√|√|√|√|√|√|√|√|√|√|√|√|√|√|√|√|√|√|√|√|√|√|√|√|√|√|√|√|√|√|√|√| | | | | |
| 141 | P-143360 | Screw |√|√|√|√|√|√|√|√|√|√|√|√|√|√|√|√|√|√|√|√|√|√|√|√|√|√|√|√|√|√|√|√|√|√|√|√|√|√|√|√|√|√|√|√|√|√|√|√|√|√|√|√|√|√|√|√|√|√|√|√|√|√|√|√|√|√|√|√|√|√|√|√|√|√|√|√|√|
| 142 | P-143360 | Screw | | | | | | | | | | | | |√|√|√|√|√|√|√|√|√|√|√|√|√|√|√|√|√|√|√|√|√|√|√|√|√|√|√|√|√|√|√|√|√|√|√|√|√|√|√|√|√|√|√|√|√|√|√|√|√|√|√|√|√|√|√|√| | | | |√|
| 143 | P-154477 | Gear Case |√|√|√|√|√|√|√|√|√|√|√|√| | | | | | | | | | | | | | | | | | | | | | | | | | | | | | | | | | | | | | | | | | | | | | | | | | | | | | | | | | | | | | | |
| | P-154478 | Gear Case (Worm Case Housing) | | | | | | | | | | | | |√| | |√|√| | | | | |√| | |√|√| | | | |√|√|√|√| | | | | |√| | |√|√|√|√|√| | | | | | | |√|√|√| | | | |√| | |√|√| | | | | | | | | | |
| | P-170376 | Gear Case | | | | | | | | | | | | | | | | | | | | | | | | | | | | | | | | | | | | | | | | | | | | | | | | | | | | | | | | | | | | | | | | | | | | |√| | | | |√|
| | P-170572 | Gear Case | | | | | | | | | | | | | |√|√| | |√|√|√|√|√| |√|√| | |√|√|√|√| | | | |√|√|√|√|√| |√|√| | | | | |√|√|√|√|√|√|√| | | |√|√|√|√| |√|√| | |√|√|√|√| | | | | | |
| 144 | P-146235 | Shaft | | |√| | | | | | | | | | | | | | | | | | | | | | | | | | | | | | | | | | | | | | | | | | | | | | | | | | | | | | | | | | | | | | | | | | | |
| | P-154387 | Shaft |√|√| | |√|√|√|√|√|√|√|√| | | | | | | | | | | | | | | | | | | |√| |√|√|√| |√|√|√|√|√|√|√|√|√|√|√|√|√|√|√|√|√|√|√|√|√|√|√|√|√|√| | | | | | | | | | | | | | | |
| | P-170378 | Shaft | | | | | | | | | | | | | | | | | | | | | | | | | | | | | | | | | | | | | | | | | | | | | | | | | | | | | | | | | | | | | | | | | | | |√| | | | |√|
| | P-170435 | Shaft | | | | | | | | | | | | | | | | | | | | | | | | | | | | | | | | | | | | | | | | | | | | | | | | | | | | | | | | | | | | | | | | | | | | |√|√|√|√| |
| 145 | P-147235 | Gasket | | | | |√| | | | | |√|√| | | | | | | | | | | | | | | | | | | | | | | | | | | | | | | | | | | | | | | | | | | | | | | | | | | | | | | | | | |
| | P-147238 | Gasket |√|√|√|√| |√|√|√|√|√| | | | | | | | | | | | | | | | | | | | | | | | | | | | | | | | | | | | | | | | | | | | | | | | | | | | | | | | | | | |
| | P-154407 | Gasket | | | | | | | | | | | | | | | | | | | | | | | | | | | | | | | | | | | | | | | |√|√|√| | | | | | | | | | | | | | |√|√|√|√|√|√| | | | | | | | | | | | | | | |
| | P-154446 | Gasket | | | | | | | | | | | | |√|√|√|√|√|√|√|√|√|√|√|√|√|√|√|√|√|√|√|√|√|√|√|√|√|√|√|√| | | |√|√|√|√|√|√|√|√|√|√|√|√|√| | | | | | |√|√|√|√|√|√|√|√|√| | | | | | |
| 146 | P-146220 | Spiral Gear |√|√|√| |√|√|√|√|√|√|√|√| | | | | | | | | | | | | | | | | | | |√| |√|√|√| |√|√|√|√|√|√|√|√|√|√|√|√|√|√|√|√|√|√|√|√|√|√|√|√|√|√| | | | | | | | | |√| | | | |√|
| 147 | P-146222 | Spiral Gear |√|√|√|√|√|√|√|√|√|√|√|√|√|√|√|√|√|√|√|√|√|√|√|√|√|√|√|√|√|√|√|√|√|√|√|√|√|√|√|√|√|√|√|√|√|√|√|√|√|√|√|√|√|√|√|√|√|√|√|√|√|√|√|√|√|√|√|√|√|√|√| | | | | | |
| | P-170383 | Helical Gear | | | | | | | | | | | | | | | | | | | | | | | | | | | | | | | | | | | | | | | | | | | | | | | | | | | | | | | | | | | | | | | | | | | |√| | | | | |
| | P-170440 | Helical Gear | | | | | | | | | | | | | | | | | | | | | | | | | | | | | | | | | | | | | | | | | | | | | | | | | | | | | | | | | | | | | | | | | | | | |√|√|√|√| |
| 148 | P-147256 | Shaft | | | | |√| | | | | |√|√| | | | | | | | | | | | | | | | | | | | | | | | | | | |√|√| | | | | | | | | | | | | | | |√|√|√|√| | | | | | | | | | | | | | | | | |
| | P-147257 | Shaft |√|√|√|√| |√|√|√|√|√| | |√| | |√|√| | | | | |√| | |√|√| | | | |√|√|√|√| | | | | | | | |√|√|√|√|√| | | | | | | |√| | | | | | |√| | |√|√| | | | | | | | | | |
| | P-170202 | Shaft | | | | | | | | | | | | | |√|√| | |√|√|√|√|√| |√|√| | |√|√|√|√| | | | |√|√|√|√|√| | | | | | | | |√|√|√|√|√|√|√| | | | | | | | |√|√| | |√|√|√|√| | | | | | |
| | P-170239 | Shaft | | | | | | | | | | | | | | | | | | | | | | | | | | | | | | | | | | | | | | | | |√| | | | | | | | | | | | | | | | | |√|√| | | | | | | | | | | | | | | |
| | P-170388 | Shaft | | | | | | | | | | | | | | | | | | | | | | | | | | | | | | | | | | | | | | | | | | | | | | | | | | | | | | | | | | | | | | | | | | | |√| | | | |√|
| | P-170437 | Shaft | | | | | | | | | | | | | | | | | | | | | | | | | | | | | | | | | | | | | | | | | | | | | | | | | | | | | | | | | | | | | | | | | | | | |√|√|√|√| |
| | P-170626 | Shaft | | | | | | | | | | | | | | | | | | | | | | | | | | | | | | | | | | | | | | | | | | | | | | | | | | | | | | | | | | | | | | | | | | | | | | | | |√|
| 149 | P-147225 | Worm Wheel |√|√|√|√|√|√|√|√|√|√|√|√| | | | | | | | | | | | | | | | | | | | | | | | | | | | | | | | | | | | | | | | | | | | | | | | | | | | | | | | | | | |
| | P-159201 | Worm Wheel | | | | | | | | | | | | | | | | | | | | | | | | | | | | | | |√|√|√|√|√|√|√|√|√|√|√|√|√|√|√|√|√|√|√|√|√|√|√|√|√|√|√|√|√|√|√| | | | | | | | | | | | | | | |
| | P-159203 | Worm Wheel | | | | | | | | | | | | |√|√|√|√|√|√|√|√|√|√|√|√|√|√|√|√|√|√|√| | | | | | | | | | | | | | | | | | | | | | | | | | | | | | | | | |√|√|√|√|√|√|√|√|√| | | | | | |
| | P-170386 | Worm Wheel | | | | | | | | | | | | | | | | | | | | | | | | | | | | | | | | | | | | | | | | | | | | | | | | | | | | | | | | | | | | | | | | | | | |√|√|√| | |√|
| | P-170494 | Worm Wheel | | | | | | | | | | | | | | | | | | | | | | | | | | | | | | | | | | | | | | | | | | | | | | | | | | | | | | | | | | | | | | | | | | | | | | |√|√| |
| 150 | P-137907 | Washer |√|√|√|√|√|√|√|√|√|√|√|√|√|√|√|√|√|√|√|√|√|√|√|√|√|√|√|√|√|√|√|√|√|√|√|√|√|√|√|√|√|√|√|√|√|√|√|√|√|√|√|√|√|√|√|√|√|√|√|√|√|√|√|√|√|√|√|√|√|√|√|√|√|√|√|√|√|
| 151 | P-137908 | Washer (phos. bronze) |√|√|√|√|√|√|√|√|√|√|√|√|√|√|√|√|√|√|√|√|√|√|√|√|√|√|√|√|√|√|√|√|√|√|√|√|√|√|√|√|√|√|√|√|√|√|√|√|√|√|√|√|√|√|√|√|√|√|√|√|√|√|√|√|√|√|√|√|√|√|√|√|√|√|√|√|√|
| 152 | 3/8" - 16 x 1/2" | Bristo Set Screw - Cup Point |√|√|√|√|√|√|√|√|√|√|√|√|√|√|√|√|√|√|√|√|√|√|√|√|√|√|√|√|√|√|√|√|√|√|√|√|√|√|√|√|√|√|√|√|√|√|√|√|√|√|√|√|√|√|√|√|√|√|√|√|√|√|√|√|√|√|√|√|√|√|√|√|√|√|√|√|√|
| 153 | 3/8" - 16 x 1/4" | Bristo Set Screw - Cup Point |√|√|√|√|√|√|√|√|√|√|√|√|√|√|√|√|√|√|√|√|√|√|√|√|√|√|√|√|√|√|√|√|√|√|√|√|√|√|√|√|√|√|√|√|√|√|√|√|√|√|√|√|√|√|√|√|√|√|√|√|√|√|√|√|√|√|√|√|√|√|√|√|√|√|√|√|√|
| 154 | P-146219 | Spiral Gear | | | | |√| | | | | |√|√| | | | | | | | | | | | | | | | | | | | | | | | | | | |√|√|√| | | | | | | | | | | | | |√|√|√|√|√|√| | | | | | | | | | | | | | | |
| | P-147226 | Spiral Gear |√|√|√|√| |√|√|√|√|√| | |√|√|√|√|√|√|√|√|√|√|√|√|√|√|√|√|√|√|√|√|√|√|√|√|√|√|√|√| | | |√|√|√|√|√|√|√|√|√|√|√|√|√| | | | | | |√|√|√|√|√|√|√|√|√| | | | | | |
| | P-170384 | Helical Gear | | | | | | | | | | | | | | | | | | | | | | | | | | | | | | | | | | | | | | | | | | | | | | | | | | | | | | | | | | | | | | | | | | | |√| | | | |√|
| | P-170443 | Helical Gear | | | | | | | | | | | | | | | | | | | | | | | | | | | | | | | | | | | | | | | | | | | | | | | | | | | | | | | | | | | | | | | | | | | | |√|√| | | |
| | P-170493 | Helical Gear | | | | | | | | | | | | | | | | | | | | | | | | | | | | | | | | | | | | | | | | | | | | | | | | | | | | | | | | | | | | | | | | | | | | | | |√|√| |
| 155 | No. 5 | Woodruff Key |√|√|√|√|√|√|√|√|√|√|√|√|√|√|√|√|√|√|√|√|√|√|√|√|√|√|√|√|√|√|√|√|√|√|√|√|√|√|√|√|√|√|√|√|√|√|√|√|√|√|√|√|√|√|√|√|√|√|√|√|√|√|√|√|√|√|√|√|√|√|√|√|√|√|√|√|√|

| ITEM NO. | PIECE PART NUMBER | NAME | DRIVE CODE - GEARCASE - WORM END (ALSO NON WORM END OF CONVERTED DRIVES) | | | | | | | | | | | | | | | | | | | | | | | | | | | | | | | | | | | | | |
|---|---|---|---|---|---|---|---|---|---|---|---|---|---|---|---|---|---|---|---|---|---|---|---|---|---|---|---|---|---|---|---|---|---|---|---|---|---|---|---|---|---|---|
| | | | 1A | 1C | 1D | 1E | 2A | 3A | 3C | 3D | 3E | 3F | 4A | 4B | 17A | 17B | 17E | 18A | 18B | 18C | 18D | 18G | 18H | 18J | 19A | 19B | 19E | 20A | 20B | 20C | 20D | 20G | 20H | 21A | 21B | 21C | 21D | 21E | 21F | 21G | 21H | 21R |
| 156 | P-147204 | Gear Case | | | | |√| | | | | |√|√| | | | | | | | | | | | | | | | | | | | | | | | | | | | | | |
| | P-147206 | Gear Case |√|√|√|√| |√|√|√|√|√| | | | | | | | | | | | | | | | | | | | | | | | | | | | | | |
| | P-154383 | Gear Case | | | | | | | | | | | | | | | | | | | | | | | | | | | | | | | | | | | | | | | | |
| | P-154385 | Gear Case | | | | | | | | | | | | |√| | |√|√| | | | | | |√| | |√|√| | | | | |√|√|√|√| | | | | |
| | P-170229 | Gear Case | | | | | | | | | | | | | | | | | | | | | | | | | | | | | | | | | | | | | | | | |
| | P-170231 | Gear Case | | | | | | | | | | | | | |√|√| | |√|√|√|√|√| |√|√| | |√|√|√|√| | | | |√|√|√|√|√|
| | P-170233 | Gear Case | | | | | | | | | | | | | | | | | | | | | | | | | | | | | | | | | | | | | | | | |
| | P-170432 | Gear Case | | | | | | | | | | | | | | | | | | | | | | | | | | | | | | | | | | | | | | | | |
| | P-170483 | Gear Case | | | | | | | | | | | | | | | | | | | | | | | | | | | | | | | | | | | | | | | | |
| | P-170628 | Gear Case | | | | | | | | | | | | | | | | | | | | | | | | | | | | | | | | | | | | | | | | |
| 157 | P-154736 | Shaft (stub shaft) | | | | | | | | | | | | |√| | |√|√| | | | | | |√| | |√|√| | | | | |√|√|√|√| | | | | |
| | P-170201 | Shaft (stub shaft) | | | | | | | | | | | | | |√|√| | |√|√|√|√|√| |√|√| | |√|√|√|√| | | | |√|√|√|√|√|
| 158 | P-147218 | Pump Casing |√|√|√|√|√|√|√|√|√|√|√|√| | | | | | | | | | | | | | | | | | | | | | | | | | | | |
| | P-154735 | Pump Casing | | | | | | | | | | | | |√| | |√|√| | | | | | |√| | |√|√| | | | | |√|√|√|√| | | | | |
| | P-170198 | Pump Casing | | | | | | | | | | | | | |√|√| | |√|√|√|√|√| |√|√| | |√|√|√|√| | | | |√|√|√|√|√|
| | P-170391 | Pump Casing | | | | | | | | | | | | | | | | | | | | | | | | | | | | | | | | | | | | | | | | |
| 159 | P-154738 | Gear |√|√|√|√|√|√|√|√|√|√|√|√|√| | |√|√| | | | | | |√| | |√|√| | | | | |√|√|√|√| | | | | |
| | P-170200 | Gear | | | | | | | | | | | | | |√|√| | |√|√|√|√|√| |√|√| | |√|√|√|√| | | | |√|√|√|√|√|
| 160 | P-154737 | Gear |√|√|√|√|√|√|√|√|√|√|√|√|√| | |√|√| | | | | | |√| | |√|√| | | | | |√|√|√|√| | | | | |
| | P-170199 | Gear | | | | | | | | | | | | | |√|√| | |√|√|√|√|√| |√|√| | |√|√|√|√| | | | |√|√|√|√|√|
| 161 | No. 1 | Woodruff Key |√|√|√|√|√|√|√|√|√|√|√|√|√| | |√|√| | | | | | |√| | |√|√| | | | | |√|√|√|√| | | | | |
| | P-170204 | Key | | | | | | | | | | | | | |√|√| | |√|√|√|√|√| |√|√| | |√|√|√|√| | | | |√|√|√|√|√|
| | P-170445 | Key | | | | | | | | | | | | | | | | | | | | | | | | | | | | | | | | | | | | | | | | |
| 162 | P-154680 | Thrust Bearing |√|√|√|√|√|√|√|√|√|√|√|√|√|√|√|√|√|√|√|√|√|√|√|√|√|√|√|√|√|√|√|√|√|√|√|√|√|√|√|√|
| 163 | P-154648 | Housing |√|√|√|√|√|√|√|√|√|√|√|√|√| | |√|√| | | | | | |√| | |√|√| | | | | |√|√|√|√| | | | | |
| | P-170570 | Housing | | | | | | | | | | | | | |√|√| | |√|√|√|√|√| |√|√| | |√|√|√|√| | | | |√|√|√|√|√|
| 164 | P-170569 | Spring |√|√|√|√|√|√|√|√|√|√|√|√|√|√|√|√|√|√|√|√|√|√|√|√|√|√|√|√|√|√|√|√|√|√|√|√|√|√|√|√|
| 165 | P-147234 | Worm |√|√|√|√|√|√|√|√|√|√|√|√| | | | | | | | | | | | | | | | | | | | | | | | | | | | |
| | P-159202 | Worm | | | | | | | | | | | | | | | | | | | | | | | | | | | | | | | |√|√|√|√| | | | | |
| | P-154204 | Worm | | | | | | | | | | | | |√| | |√|√| | | | | | |√| | |√|√| | | | | | | | | | | | | | |
| | P-170140 | Worm | | | | | | | | | | | | | | | | | | | | | | | | | | | | | | | | | | |√|√|√|√|√|
| | P-170163 | Worm | | | | | | | | | | | | | |√|√| | |√|√|√|√|√| |√|√| | |√|√|√|√| | | | | | | | | |
| | P-170385 | Worm | | | | | | | | | | | | | | | | | | | | | | | | | | | | | | | | | | | | | | | | |
| | P-170496 | Worm | | | | | | | | | | | | | | | | | | | | | | | | | | | | | | | | | | | | | | | | |
| 166 | P-147227 | Spiral Gear |√|√|√|√|√|√|√|√|√|√|√|√|√|√|√|√|√|√|√|√|√|√|√|√|√|√|√|√|√|√|√|√|√|√|√|√|√|√|√|√|
| 167 | 3/32"x 3/4" | Cotter Pin (steel) |√|√|√|√|√|√|√|√|√|√|√|√|√|√|√|√|√|√|√|√|√|√|√|√|√|√|√|√|√|√|√|√|√|√|√|√|√|√|√|√|
| 168 | 7/16"-20 | S.A.E. Castellated Nut |√|√|√|√|√|√|√|√|√|√|√|√|√|√|√|√|√|√|√|√|√|√|√|√|√|√|√|√|√|√|√|√|√|√|√|√|√|√|√|√|
| 169 | P-146251 | Washer |√|√|√|√|√|√|√|√|√|√|√|√|√|√|√|√|√|√|√|√|√|√|√|√|√|√|√|√|√|√|√|√|√|√|√|√|√|√|√|√|
| 170 | No. 5 | Woodruff Key |√|√|√|√|√|√|√|√|√|√|√|√|√|√|√|√|√|√|√|√|√|√|√|√|√|√|√|√|√|√|√|√|√|√|√|√|√|√|√|√|
| 171 | No. 3 | Woodruff Key |√|√|√|√|√|√|√|√|√|√|√|√| | | | | | | | | | | | | | | | | | | | |√| |√|√|√| |√|√|√|
| 172 | P-146215 | Spiral Gear |√|√|√|√|√|√|√|√|√|√|√|√| | | | | | | | | | | | | | | | | | | | |√| |√|√|√| |√|√|√|
| 173 | P-145893 | Screw | | | | | | | | | | | | | |√|√| | |√|√|√|√|√| |√|√| | |√|√|√|√| | | | |√|√|√|√|√|
| 174 | P-170364 | Clamp | | | | | | | | | | | | | |√|√| | |√|√|√|√|√| |√|√| | |√|√|√|√| | | | |√|√|√|√|√|
| 175 | P-170365 | Tube | | | | | | | | | | | | | |√|√| | |√|√|√|√|√| |√|√| | |√|√|√|√| | | | |√|√|√|√|√|

| ITEM NO. | PIECE PART NUMBER | NAME | DRIVE CODE - GEARCASE - WORM END (ALSO NON WORM END OF CONVERTED DRIVES) | | | | | | | | | | | | | | | | | | | | | | | | | | | | | | | | | | | |
|---|---|---|---|---|---|---|---|---|---|---|---|---|---|---|---|---|---|---|---|---|---|---|---|---|---|---|---|---|---|---|---|---|---|---|---|---|---|---|---|
| | | | 22A | 22B | 22C | 23A | 23B | 23C | 23D | 23F | 23G | 23H | 23J | 23K | 23L | 23T | 23U | 23W | 24A | 24B | 24C | 24D | 24E | 24F | 25A | 25B | 25E | 26A | 26B | 26C | 26D | 26G | 26H | 35A | 45A | 46A | 47A | 48A | 49A |
| 156 | P-147204 | Gear Case | | | | | | | | | | | | | | | | | | | | | | | | | | | | | | | | | | | | | |
| | P-147206 | Gear Case | | | | | | | | | | | | | | | | | | | | | | | | | | | | | | | | | | | | | |
| | P-154383 | Gear Case |√| | | | | | | | | | | | | | | |√|√| | | | | | | | | | | | | | | | | | | |
| | P-154385 | Gear Case | | | |√|√|√|√|√| | | | | | | |√| | | | | | |√| | |√|√| | | | | | | | | | |
| | P-170229 | Gear Case | |√| | | | | | | | | | | | | | | | |√|√| | | | | | | | | | | | | | | | | |
| | P-170231 | Gear Case | | | | | | | | |√|√|√|√|√|√|√| | | | | | | | |√|√| | |√|√|√|√| | | | | | |
| | P-170233 | Gear Case | | |√| | | | | | | | | | | | | | | | | |√|√| | | | | | | | | | | | | | | |
| | P-170432 | Gear Case | | | | | | | | | | | | | | | | | | | | | | | | | | | | | | | | |√|√| | | |
| | P-170483 | Gear Case | | | | | | | | | | | | | | | | | | | | | | | | | | | | | | | | | | |√|√| |
| | P-170628 | Gear Case | | | | | | | | | | | | | | | | | | | | | | | | | | | | | | |√| | | | | |√|
| 157 | P-154736 | Shaft (stub shaft) |√|√| |√|√|√|√|√| | | | | | | |√|√|√|√|√| | |√| | |√|√| | | | | | | | | | |
| | P-170201 | Shaft (stub shaft) | | |√| | | | | |√|√|√|√|√|√|√| | | | | |√|√| |√|√| | |√|√|√|√|√|√|√|√|√|√|
| 158 | P-147218 | Pump Casing | | | | | | | | | | | | | | | | | | | | | | | | | | | | | | | | | | | | | |
| | P-154735 | Pump Casing |√|√| |√|√|√|√|√| | | | | | | |√|√|√|√|√| | |√| | |√|√| | | | | | | | | | |
| | P-170198 | Pump Casing | | |√| | | | | |√|√|√|√|√|√|√| | | | | |√|√| |√|√| | |√|√|√|√| | | | | | |
| | P-170391 | Pump Casing | | | | | | | | | | | | | | | | | | | | | | | | | | | | | | |√| | | | | |√|
| 159 | P-154738 | Gear |√|√| |√|√|√|√|√| | | | | | | |√|√|√|√|√| | |√| | |√|√| | | | | | | | | | |
| | P-170200 | Gear | | |√| | | | | |√|√|√|√|√|√|√| | | | | |√|√| |√|√| | |√|√|√|√|√|√|√|√|√|√|
| 160 | P-154737 | Gear |√|√| |√|√|√|√|√| | | | | | | |√|√|√|√|√| | |√| | |√|√| | | | | | | | | | |
| | P-170199 | Gear | | |√| | | | | |√|√|√|√|√|√|√| | | | | |√|√| |√|√| | |√|√|√|√|√|√|√|√|√|√|
| 161 | No. 1 | Woodruff Key |√|√| |√|√|√|√|√| | | | | | | |√|√|√|√|√| | |√| | |√|√| | | | | | | | | | |
| | P-170204 | Key | | |√| | | | | |√|√|√|√|√|√|√| | | | | |√|√| |√|√| | |√|√|√|√|√| | | | |√|
| | P-170445 | Key | | | | | | | | | | | | | | | | | | | | | | | | | | | | | | | |√|√|√|√| |
| 162 | P-154680 | Thrust Bearing |√|√|√|√|√|√|√|√|√|√|√|√|√|√|√|√|√|√|√|√|√|√|√|√|√|√|√|√|√|√|√| | | | | | |
| 163 | P-154648 | Housing |√| | |√|√|√|√|√| | | | | | | |√|√|√| | | | |√| | |√|√| | | | | | | | | | |
| | P-170570 | Housing | |√|√| | | | | |√|√|√|√|√|√|√| | | |√|√|√|√| |√|√| | |√|√|√|√| | | | | | |
| 164 | P-170569 | Spring |√|√|√|√|√|√|√|√|√|√|√|√|√|√|√|√|√|√|√|√|√|√|√|√|√|√|√|√|√|√|√| | | | | | |
| 165 | P-147234 | Worm | | | | | | | | | | | | | | | | | | | | | | | | | | | | | | | | | | | | | |
| | P-159202 | Worm |√| | |√|√|√|√|√| | | | | | | |√|√|√| | | | | | | | | | | | | | | | | | | |
| | P-154204 | Worm | | | | | | | | | | | | | | | | | | | | | | |√| | |√|√| | | | | | | | | | |
| | P-170140 | Worm | |√|√| | | | | |√|√|√|√|√|√|√| | | |√|√|√|√| | | | | | | | | | | | | | | |
| | P-170163 | Worm | | | | | | | | | | | | | | | | | | | | | | | |√|√| | |√|√|√|√| | | | | | |
| | P-170385 | Worm | | | | | | | | | | | | | | | | | | | | | | | | | | | | | | |√|√|√| | | |√|
| | P-170496 | Worm | | | | | | | | | | | | | | | | | | | | | | | | | | | | | | | | | | |√|√| |
| 166 | P-147227 | Spiral Gear |√|√|√|√|√|√|√|√|√|√|√|√|√|√|√|√|√|√|√|√|√|√|√|√|√|√|√|√|√|√|√| | | | | | |
| 167 | 3/32"x 3/4" | Cotter Pin (steel) |√|√|√|√|√|√|√|√|√|√|√|√|√|√|√|√|√|√|√|√|√|√|√|√|√|√|√|√|√|√|√|√|√|√|√|√|√|
| 168 | 7/16"-20 | S.A.E. Castellated Nut |√|√|√|√|√|√|√|√|√|√|√|√|√|√|√|√|√|√|√|√|√|√|√|√|√|√|√|√|√|√|√|√|√|√|√|√|√|
| 169 | P-146251 | Washer |√|√|√|√|√|√|√|√|√|√|√|√|√|√|√|√|√|√|√|√|√|√|√|√|√|√|√|√|√|√|√|√|√|√|√|√|√|
| 170 | No. 5 | Woodruff Key |√|√|√|√|√|√|√|√|√|√|√|√|√|√|√|√|√|√|√|√|√|√|√|√|√|√|√|√|√|√|√|√|√|√|√|√|√|
| 171 | No. 3 | Woodruff Key |√|√|√|√|√|√|√|√|√|√|√|√|√|√|√|√|√|√|√|√|√|√| | | | | | | | | | | | | | | |
| 172 | P-146215 | Spiral Gear |√|√|√|√|√|√|√|√|√|√|√|√|√|√|√|√|√|√|√|√|√|√| | | | | | | | | | | | | | | |
| 173 | P-145893 | Screw | | |√| | | | | |√|√|√|√|√|√|√| | | | | |√|√| |√|√| | |√|√|√|√|√|√|√|√|√|√|
| 174 | P-170364 | Clamp | | |√| | | | | |√|√|√|√|√|√|√| | | | | |√|√| |√|√| | |√|√|√|√|√|√|√|√|√|√|
| 175 | P-170365 | Tube | | |√| | | | | |√|√|√|√|√|√|√| | | | | |√|√| |√|√| | |√|√|√|√|√|√|√|√|√|√|

| ITEM NO. | PIECE PART NUMBER | NAME | DRIVE CODE - GEARCASE - WORM END (ALSO NON WORM END OF CONVERTED DRIVES) | | | | | | | | | | | | | | | | | | | | | | | | | | | | | | | | | | | | | | | | | | | | | | | | | | | | | | | | | | | | | | | | | | | | | | | | | | | | |
|---|---|---|---|---|---|---|---|---|---|---|---|---|---|---|---|---|---|---|---|---|---|---|---|---|---|---|---|---|---|---|---|---|---|---|---|---|---|---|---|---|---|---|---|---|---|---|---|---|---|---|---|---|---|---|---|---|---|---|---|---|---|---|---|---|---|---|---|---|---|---|---|---|---|---|---|---|---|---|---|
| | | | 1A | 1C | 1D | 1E | 2A | 3A | 3C | 3D | 3E | 3F | 4A | 4B | 17A | 17B | 17E | 18A | 18B | 18C | 18D | 18G | 18H | 18J | 19A | 19B | 19E | 20A | 20B | 20C | 20D | 20G | 20H | 21A | 21B | 21C | 21D | 21E | 21F | 21G | 21H | 21R | 22A | 22B | 22C | 23A | 23B | 23C | 23D | 23F | 23G | 23H | 23J | 23K | 23L | 23T | 23U | 23W | 24A | 24B | 24C | 24D | 24E | 24F | 25A | 25B | 25E | 26A | 26B | 26C | 26D | 26G | 26H | 35A | 45A | 46A | 47A | 48A | 49A |
| 176 | P-170278 | Screw | | | | | | | | | | | | | | √ | √ | | | √ | √ | √ | √ | √ | | √ | √ | | | √ | √ | √ | √ | | | | | √ | √ | √ | √ | √ | | √ | √ | | | | | | √ | √ | √ | √ | √ | √ | √ | | | | √ | √ | √ | √ | | √ | √ | | | √ | √ | √ | √ | √ | √ | √ | √ | √ | √ |
| 177 | P-170154 | Cover | | | | | | | | | | | | | | √ | √ | | | √ | √ | √ | √ | √ | | √ | √ | | | √ | √ | √ | √ | | | | | √ | √ | √ | √ | √ | | √ | √ | | | | | | √ | √ | √ | √ | √ | √ | √ | | | | √ | √ | √ | √ | | √ | √ | | | √ | √ | √ | √ | √ | √ | √ | √ | √ | √ |
| 178 | P-170281 | Screw | | | | | | | | | | | | | | √ | √ | | | √ | √ | √ | √ | √ | | √ | √ | | | √ | √ | √ | √ | | | | | √ | √ | √ | √ | √ | | √ | √ | | | | | | √ | √ | √ | √ | √ | √ | √ | | | | √ | √ | √ | √ | | √ | √ | | | √ | √ | √ | √ | √ | √ | √ | √ | √ | √ |
| 179 | P-170276 | Screw | | | | | | | | | | | | | | | | | | | | | | | | | | | | | | | | | | | | | | | | | | | | | | | | | | | | | | | | | | | | | | | | | | | | | | | | | | √ | √ | √ | √ | √ |
| | P-170277 | Screw | | | | | | | | | | | | | | √ | √ | | | √ | √ | √ | √ | √ | | √ | √ | | | √ | √ | √ | √ | | | | | √ | √ | √ | √ | √ | | √ | √ | | | | | | √ | √ | √ | √ | √ | √ | √ | | | | √ | √ | √ | √ | | √ | √ | | | √ | √ | √ | √ | √ | | | | | |
| 180 | P-170063 | Screw | | | | | | | | | | | | | | √ | √ | | | √ | √ | √ | √ | √ | | √ | √ | | | √ | √ | √ | √ | | | | | √ | √ | √ | √ | √ | | | √ | | | | | | √ | √ | √ | √ | √ | √ | √ | | | | | | √ | √ | | √ | √ | | | √ | √ | √ | √ | √ | | | | | √ |
| 181 | P-170379 | Helical Gear | | | | | | | | | | | | | | | | | | | | | | | | | | | | | | | | | | | | | | | | | | | | | | | | | | | | | | | | | | | | | | | | | | | | | | | | | √ | | | | | √ |
| 182 | No. 3 | Woodruff Key | | | | | | | | | | | | | | | | | | | | | | | | | | | | | | | | | | | | | | | | | | | | | | | | | | | | | | | | | | | | | | | | | | | | | | | | | √ | | | | | √ |
| 183 | P-170380 | Screw | | | | | | | | | | | | | | | | | | | | | | | | | | | | | | | | | | | | | | | | | | | | | | | | | | | | | | | | | | | | | | | | | | | | | | | | | √ | | | | | √ |
| 184 | 1/2"x3/16" x 1/16" | Positive Lock Washer | | | | | | | | | | | | | | | | | | | | | | | | | | | | | | | | | | | | | | | | | | | | | | | | | | | | | | | | | | | | | | | | | | | | | | | | | | √ | | | | | √ |
| 185 | P-170389 | Helical Gear | | | | | | | | | | | | | | | | | | | | | | | | | | | | | | | | | | | | | | | | | | | | | | | | | | | | | | | | | | | | | | | | | | | | | | | | | √ | | | | | √ |
| 186 | P-170387 | Spiral Gear | | | | | | | | | | | | | | | | | | | | | | | | | | | | | | | | | | | | | | | | | | | | | | | | | | | | | | | | | | | | | | | | | | | | | | | | | √ | | | | | √ |
| 187 | P-170382 | Ball Bearing | | | | | | | | | | | | | | | | | | | | | | | | | | | | | | | | | | | | | | | | | | | | | | | | | | | | | | | | | | | | | | | | | | | | | | | | | √ | √ | √ | √ | √ | √ |
| 188 | P-170377 | Washer | | | | | | | | | | | | | | | | | | | | | | | | | | | | | | | | | | | | | | | | | | | | | | | | | | | | | | | | | | | | | | | | | | | | | | | | | √ | √ | √ | √ | √ | √ |
| 189 | P-154969 | Ball Bearing | | | | | | | | | | | | | | | | | | | | | | | | | | | | | | | | | | | | | | | | | | | | | | | | | | | | | | | | | | | | | | | | | | | | | | | | | √ | √ | √ | √ | √ | √ |
| 190 | P-170381 | Clamp Nut | | | | | | | | | | | | | | | | | | | | | | | | | | | | | | | | | | | | | | | | | | | | | | | | | | | | | | | | | | | | | | | | | | | | | | | | | √ | √ | √ | √ | √ | √ |
| 191 | P-115502 | Screw | | | | | | | | | | | | | | | | | | | | | | | | | | | | | | | | | | | | | | | | | | | | | | | | | | | | | | | | | | | | | | | | | | | | | | | | | √ | √ | √ | √ | √ | √ |
| 192 | P-170479 | Pipe Plug | √ | √ | √ | √ | √ | √ | √ | √ | √ | √ | √ | √ | √ | √ | √ | √ | √ | √ | √ | √ | √ | √ | √ | √ | √ | √ | √ | √ | √ | √ | √ | √ | √ | √ | √ | √ | √ | √ | √ | √ | √ | √ | √ | √ | √ | √ | √ | √ | √ | √ | √ | √ | √ | √ | √ | √ | √ | √ | √ | √ | √ | √ | √ | √ | √ | √ | √ | √ | √ | √ | √ | √ | | | | | |
| 193 | P-290150 | Plug | √ | √ | √ | √ | √ | √ | √ | √ | √ | √ | √ | √ | √ | √ | √ | √ | √ | √ | √ | √ | √ | √ | √ | √ | √ | √ | √ | √ | √ | √ | √ | √ | √ | √ | √ | √ | √ | √ | √ | √ | √ | √ | √ | √ | √ | √ | √ | √ | √ | √ | √ | √ | √ | √ | √ | √ | √ | √ | √ | √ | √ | √ | √ | √ | √ | √ | √ | √ | √ | √ | √ | √ | | | | | |
| 194 | P-170477 | Plug | | | | | | | | | | | | | | √ | √ | | | √ | √ | √ | √ | √ | | √ | √ | | | √ | √ | √ | √ | | | | | √ | √ | √ | √ | √ | | | √ | | | | | | √ | √ | √ | √ | √ | √ | √ | | | | | | √ | √ | | √ | √ | | | √ | √ | √ | √ | √ | √ | √ | √ | √ | √ |
| 195 | P-170581 | Washer | | | | | | | | | | | | | | √ | √ | | | √ | √ | √ | √ | √ | | √ | √ | | | √ | √ | √ | √ | | | | | √ | √ | √ | √ | √ | | | √ | | | | | | √ | √ | √ | √ | √ | √ | √ | | | | | | √ | √ | | √ | √ | | | √ | √ | √ | √ | √ | √ | √ | √ | √ | √ |
| 196 | P-173656 | Plug | | | | | | | | | | | | | | √ | √ | | | √ | √ | √ | √ | √ | | √ | √ | | | √ | √ | √ | √ | | | | | √ | √ | √ | √ | √ | | | √ | | | | | | √ | √ | √ | √ | √ | √ | √ | | | | | | √ | √ | | √ | √ | | | √ | √ | √ | √ | √ | √ | √ | √ | √ | √ |
| 197 | P-147229 | Spiral Gear | | | | | √ | | | | | | √ | √ | | | | | | | | | | | | | | | | | | | | | | | | | | | | | | √ | √ | √ | | | | | | | | | | | | | | √ | √ | √ | √ | √ | √ | | | | | | | | | | | | | | | |
| 198 | P-147230 | Spiral Gear | | | | | √ | | | | | | √ | √ | | | | | | | | | | | | | | | | | | | | | | | | | | | | | | √ | √ | √ | | | | | | | | | | | | | | √ | √ | √ | √ | √ | √ | | | | | | | | | | | | | | | |
| 199 | P-146217 | Helical Gear | | | | | √ | | | | | | √ | √ | | | | | | | | | | | | | | | | | | | | | | | | | | | | | | √ | √ | √ | | | | | | | | | | | | | | √ | √ | √ | √ | √ | √ | | | | | | | | | | | | | | | |
| | P-170492 | Helical Gear | | | | | | | | | | | | | | | | | | | | | | | | | | | | | | | | | | | | | | | | | | | | | | | | | | | | | | | | | | | | | | | | | | | | | | | | | | | | √ | √ | |
| 200 | P-146238 | Gear Stud | | | | | √ | | | | | | √ | √ | | | | | | | | | | | | | | | | | | | | | | | | | | | | | | √ | √ | √ | | | | | | | | | | | | | | √ | √ | √ | √ | √ | √ | | | | | | | | | | | | | √ | √ | |
| 201 | P-146247 | Gear Stud Sleeve | | | | | √ | | | | | | √ | √ | | | | | | | | | | | | | | | | | | | | | | | | | | | | | | √ | √ | √ | | | | | | | | | | | | | | √ | √ | √ | √ | √ | √ | | | | | | | | | | | | | √ | √ | |
| 202 | No. 3 | Woodruff Key | | | | | √ | | | | | | √ | √ | | | | | | | | | | | | | | | | | | | | | | | | | | | | | | √ | √ | √ | | | | | | | | | | | | | | √ | √ | √ | √ | √ | √ | | | | | | | | | | | | | √ | √ | |
| 203 | P-146218 | Sprial Gear | | | | | √ | | | | | | √ | √ | | | | | | | | | | | | | | | | | | | | | | | | | | | | | | √ | √ | √ | | | | | | | | | | | | | | √ | √ | √ | √ | √ | √ | | | | | | | | | | | | | | | |
| | P-170491 | Helical Gear | | | | | | | | | | | | | | | | | | | | | | | | | | | | | | | | | | | | | | | | | | | | | | | | | | | | | | | | | | | | | | | | | | | | | | | | | | | | √ | √ | |
| 204 | 3/32"x3/4" | Cotter Pin (steel) | | | | | √ | | | | | | √ | √ | | | | | | | | | | | | | | | | | | | | | | | | | | | | | | √ | √ | √ | | | | | | | | | | | | | | √ | √ | √ | √ | √ | √ | | | | | | | | | | | | | √ | √ | |
| 205 | 7/16"-20 | S.A.E. Castellated Nut | | | | | √ | | | | | | √ | √ | | | | | | | | | | | | | | | | | | | | | | | | | | | | | | √ | √ | √ | | | | | | | | | | | | | | √ | √ | √ | √ | √ | √ | | | | | | | | | | | | | √ | √ | |
| 206 | P-146239 | Gear Stud Washer | | | | | √ | | | | | | √ | √ | | | | | | | | | | | | | | | | | | | | | | | | | | | | | | √ | √ | √ | | | | | | | | | | | | | | √ | √ | √ | √ | √ | √ | | | | | | | | | | | | | √ | √ | |
| 207 | P-170063 | Screw | | | | | | | | | | | | | | | | | | | | | | | | | | | | | | | | | | | | | | | | | | | | | | | | | | | | | | | | | | | | | | | | | | | | | | | | | | √ | √ | √ | √ | |
| 208 | P-170449 | Cover | | | | | | | | | | | | | | | | | | | | | | | | | | | | | | | | | | | | | | | | | | | | | | | | | | | | | | | | | | | | | | | | | | | | | | | | | | √ | √ | √ | √ | |
| 209 | 3/32"x3/4" | Cotter Pin (steel) | | | | | | | | | | | | | | | | | | | | | | | | | | | | | | | | | | | | | | | | | | | | | | | | | | | | | | | | | | | | | | | | | | | | | | | | | | √ | √ | √ | √ | |
| 210 | 3/8"-24 | S.A.E. Castellated Nut | | | | | | | | | | | | | | | | | | | | | | | | | | | | | | | | | | | | | | | | | | | | | | | | | | | | | | | | | | | | | | | | | | | | | | | | | | √ | √ | √ | √ | |
| 211 | P-170439 | Helical Gear | | | | | | | | | | | | | | | | | | | | | | | | | | | | | | | | | | | | | | | | | | | | | | | | | | | | | | | | | | | | | | | | | | | | | | | | | | √ | √ | | | |
| | P-170487 | Helical Gear | | | | | | | | | | | | | | | | | | | | | | | | | | | | | | | | | | | | | | | | | | | | | | | | | | | | | | | | | | | | | | | | | | | | | | | | | | | | √ | √ | |
| 212 | P-170438 | Washer | | | | | | | | | | | | | | | | | | | | | | | | | | | | | | | | | | | | | | | | | | | | | | | | | | | | | | | | | | | | | | | | | | | | | | | | | | √ | √ | √ | √ | |
| 213 | P-137907 | Washer (steel) | | | | | | | | | | | | | | | | | | | | | | | | | | | | | | | | | | | | | | | | | | | | | | | | | | | | | | | | | | | | | | | | | | | | | | | | | | √ | √ | √ | √ | |

| ITEM NO. | PIECE PART NUMBER | NAME | DRIVE CODE - GEARCASE - WORM END (ALSO NON WORM END OF CONVERTED DRIVES) ||||||||||||||||||||||||||||||||||||||||||||||||||||||||||||||||||||||||||||||
|---|---|---|---|---|---|---|---|---|---|---|---|---|---|---|---|---|---|---|---|---|---|---|---|---|---|---|---|---|---|---|---|---|---|---|---|---|---|---|---|---|---|---|---|---|---|---|---|---|---|---|---|---|---|---|---|---|---|---|---|---|---|---|---|---|---|---|---|---|---|---|---|---|---|---|---|---|---|---|---|
| | | |1A|1C|1D|1E|2A|3A|3C|3D|3E|3F|4A|4B|17A|17B|17E|18A|18B|18C|18D|18G|18H|18J|19A|19B|19E|20A|20B|20C|20D|20G|20H|21A|21B|21C|21D|21E|21F|21G|21H|21R|22A|22B|22C|23A|23B|23C|23D|23F|23G|23H|23J|23K|23L|23T|23U|23W|24A|24B|24C|24D|24E|24F|25A|25B|25E|26A|26B|26C|26D|26G|26H|35A|45A|46A|47A|48A|49A|
| 214 | P-137908 | Washer (phos. bronze) ||||||||||||||||||||||||||||||||||||||||||||||||||||||||||||||||||||||||||√|√|√|√||
| 215 | P-170444 | Helical Gear ||||||||||||||||||||||||||||||||||||||||||||||||||||||||||||||||||||||||||√|√||||
| 216 | P-146256 | Spring Clip ||||||||||||||||||||||||||||||||||||||||||||||||||||||||||||||||||||||||||√|√|√|√||
| 217 | 3/8"-16 x 3/8" | Bristo Set Screw - Cup Point ||||||||||||||||||||||||||||||||||||||||||||||||||||||||||||||||||||||||||√|√|√|√||
| 218 | P-170441 | Helical Gear ||||||||||||||||||||||||||||||||||||||||||||||||||||||||||||||||||||||||||√|√||||
| 219 | P-170442 | Helical Gear ||||||||||||||||||||||||||||||||||||||||||||||||||||||||||||||||||||||||||√|√||||
| | P-170490 | Helical Gear ||||||||||||||||||||||||||||||||||||||||||||||||||||||||||||||||||||||||||||√|√||
| 220 | P-170436 | Helical Gear ||||||||||||||||||||||||||||||||||||||||||||||||||||||||||||||||||||||||||√|√||||
| | P-170486 | Helical Gear ||||||||||||||||||||||||||||||||||||||||||||||||||||||||||||||||||||||||||||√|√||
| 221 | P-170536 | Helical Gear ||||||||||||||||||||||||||||||||||||||||||||||||||||||||||||||||||||||||||||√|√||
| 222 | P-170537 | Helical Gear ||||||||||||||||||||||||||||||||||||||||||||||||||||||||||||||||||||||||||||√|√||
| 223 | P-170489 | Helical Gear ||||||||||||||||||||||||||||||||||||||||||||||||||||||||||||||||||||||||||||√|√||
| 224 | P-147213 | Gear Case Cover (upper) ||||||||√|√||||||||||||||||||||||||||||||||||||||||||||||||||||||||||||||||||||
| | P-147208 | Gear Case Cover (upper) ||||||||||||√|||||||||||||||||||||||||||||||||||||||||||||||||||||||||||||||||
| | P-170574 | Gear Case Cover (upper) |||||||||||||||||√||√|||√|||||√||√||√|||||||||||||||√||√|||√||√|||√|√||||||||||||||√||√||√|||||||
| | P-154389 | Gear Case Cover (upper) ||||||||||||||||||||||||||||||||||||||||||||||||||||||||||√||√|||||||||||||||||||
| | P-170575 | Gear Case Cover (upper) ||||||||||||||||||||||||||||||||||||||||||||||||||||||||||||||√|||||||||||||||||
| 225 | P-154762 | Gear Case Cover (lower) ||||||||√|√|||√||||||||||||||||||||||||||||||||||||||||||||||||||||||||||||||||
| | P-154763 | Gear Case Cover (lower) |||||||||||||||||√||√|||√|||||√||√||√|||||||||||||||√||√|||√||√|||√|√||√||√||√||||√||√||√|||||||
| 226 | P-137907 | Washer (steel) ||||||||√|√|||√||||√||√|||√|||||√||√||√|||||||||||||||√||√|||√||√|||√|√||√||√||√||||√||√||√|||√||√||
| 227 | P-137908 | Washer (phos. bronze) ||||||||√|√|||√||||√||√|||√|||||√||√||√|||||||||||||||√||√|||√||√|||√|√||√||√||√||||√||√||√|||√||√||
| 228 | P-154387 | Shaft ||||||||||||||||||||||||||||||||||||||||||||||||||√||√|||√||||||||||||||||||||||||
| | P-154746 | Shaft ||||||||||||||||||||||||||||||||||||||||||||||||||||||||||√||||||||||||||||||||
| 229 | P-146220 | Spiral Gear ||||||||||||||||||||||||||||||||||||||||||||||||||√||√|||√||||||||||||||||||||||||
| 230 | P-154446 | Gasket |||||||||||||||||||√|||√||||||√||√|||||||||||||||||||√||√|||√||||||||||||||√||||||||||
| 231 | P-147226 | Spiral Gear |||||||||√|||||||||√|||√||||||√||√|||||||||||||||||||√||√|||√||||||||||||||√||√|||||||
| 232 | P-170231 | Gear Case |||||||||||||||||||√|||√||||||√||√|||||||||||||||||||√||√|||√||||||||||||||√||√|||||||
| 233 | 68F | Connector Assembly - 3/8" Male Thread ||||||√|√|||√|√|√||||√||||||||||√||||||||||||||||||||√||√||√||||||||||√|√|√|√||||||√|||||||||||||
| 234 | 69F | Elbow Assembly - 1/8" Male Thread |√|√|√|√|√|√|√|√|√|√|√|√|√|||√|√||||||√|||√|√|||||√|√|√|√|||||√|√||√|√|√|√|√||||||||√|√|√|√|√|||√|||√|√||||||||||||
| 235 | P-170228 | Elbow Assembly - 3/8" Male Thread |√|√|√|√|√|√|√|√|√|√|√|√|√|||√|√||||||√|||√|√|||||√|√|√|√|||||√|√||√|√|√|√|√||||||||√|√|√|√|√|||√|||√|√||||||||||||
| 236 | No. 5 | Woodruff Key |||||√|||||√|√||||||||||||||||||||||||||||||√|√|√||||||||||||||√|√|√|√|√|√|||||||||||√|√|√|√||
| 237 | No. 3 | Woodruff Key |||||√|||||√|√||||||||||||||||||||||||||||||√|√|√||||||||||||||√|√|√|√|√|√|||||||||||||√|√||
| 238 | P-170447 | Screw |||||||||||||||||||||||||||||||||||||||||||||||||||||||||||||||||||||||||√|||||√|
| 239 | P-147223 | Roll Guard ||||||||√|√|||√||||||||||||||||||||||||||||||||||||||||||||||||||||||||||||||||
| | P-154451 | Roll Guard |||||||||||||||||√||√|||√|||||√||√||√|||||||||||||||√||√|||√||√|||√|√||√||√||√||||√||√||√|||||||
| 240 | P-170063 | Screw ||||||||√|√|||√||||||||||||||||||||||||||||||||||||||||||||||||||||||||||||||||
| | P-143360 | Screw |||||||||||||||||√||√|||√|||||√||√||√|||||||||||||||√||√|||√||√|||√|√||√||√||√||||√||√||√|||||||
| 241 | P-147267 | Terminal |√|√|√|√|√|√|√|√|√|√|√|√|√|||√|√||||||√|||√|√|||||√|√|√|√|||||√|||√|√|√|√|√||||||||√|√|√|||||√|||√|√||||||||||||

DRIVE CODE - GEAR CASE - NON WORM END

| ITEM NO. | PIECE PART NUMBER | NAME | 1A | 1C | 1D | 1E | 2A | 3A | 3C | 3D | 3E | 3F | 4A | 4B | 17A | 17B | 17E | 18A | 18B | 18C | 18D | 18G | 18H | 18J | 19A | 19B | 19E |
|---|---|---|---|---|---|---|---|---|---|---|---|---|---|---|---|---|---|---|---|---|---|---|---|---|---|---|---|
| 300 | P-147223 | Roll Guard | | | | | |√|√| | |√|√| | | | | | | | | | | | | | |
| | P-154451 | Roll Guard | | | | | | | | | | | | | | | |√| |√| |√|√| | | | |
| 301 | P-170063 | Screw | | | | | |√|√| | |√|√| | | | | | | | | | | | | | |
| | P-143360 | Screw | | | | | | | | | | | | | | | |√| |√| |√|√| | | | |
| 302 | P-147210 | Gear Case Cover (upper) | | | | | | | | | | |√| | | | | | | | | | | | | | |
| | P-147212 | Gear Case Cover (upper) | | | | | |√|√| | |√| | | | | | | | | | | | | | | |
| | P-170627 | Gear Case Cover | | | | | | | | | | | | | | | | | | | | | | | | | |
| | P-154390 | Gear Case Cover (upper) | | | | | | | | | | | | | | | | | | | | | | | | | |
| | P-170210 | Gear Case Cover (upper) | | | | | | | | | | | | | | | |√| |√| |√|√| | | | |
| | P-170236 | Gear Case Cover (upper) | | | | | | | | | | | | | | | | | | | | | | | | | |
| | P-170562 | Gear Case Cover (upper) | | | | | | | | | | | | | | | | | | | | | | | | | |
| | P-170564 | Gear Case Cover (upper) | | | | | | | | | | | | | | | | | | | | | | | | | |
| 303 | P-147211 | Gear Case Cover (lower) | | | | | |√|√| | |√|√| | | | | | | | | | | | | | |
| | P-154404 | Gear Case Cover (lower) | | | | | | | | | | | | | | | |√| |√| |√|√| | | | |
| 304 | P-201421 | Screw | | | | | |√|√| | |√|√| | | | |√| | | | | | | | | |
| | P-170280 | Screw | | | | | | | | | | | | | |√|√| | |√| |√|√| | |√|√|
| 305 | P-143360 | Screw | | | | | |√|√| | |√|√| | | | |√| |√| |√|√| | | | |
| | P-170275 | Screw | | | | | | | | | | | | | | | | | | | | | | | | | |
| 306 | P-154746 | Shaft | | | | | | | | | | |√| | | | | | | | | | | | | | |
| | P-154747 | Shaft | | | | | |√|√| | |√| | | | | |√| | | | | | | | | |
| | P-170206 | Shaft | | | | | | | | | | | | | | | | | |√| |√|√| | | | |
| | P-170240 | Shaft | | | | | | | | | | | | | | | | | | | | | | | | | |
| | P-170378 | Shaft | | | | | | | | | | | | | | | | | | | | | | | | | |
| | P-170435 | Shaft | | | | | | | | | | | | | | | | | | | | | | | | | |
| 307 | P-147236 | Gasket | | | | | | | | | | |√| | | | | | | | | | | | | | |
| | P-147239 | Gasket | | | | | |√|√| | |√| | | | | | | | | | | | | | | |
| | P-154376 | Gasket | | | | | | | | | | | | | | | | | | | | | | | | | |
| | P-154447 | Gasket | | | | | | | | | | | | | | | |√| |√| |√|√| | | | |
| 308 | P-146220 | Spiral Gear | | | | | |√|√| | |√|√| | | | |√| |√| |√|√| | | | |
| 309 | P-146219 | Spiral Gear | | | | | | | | | | |√| | | | | | | | | | | | | | |
| | P-147226 | Spiral Gear | | | | | |√|√| | |√| | | | | |√| |√| |√|√| | | | |
| | P-170459 | Spiral Gear | | | | | | | | | | | | | | | | | | | | | | | | | |
| | P-170493 | Spiral Gear | | | | | | | | | | | | | | | | | | | | | | | | | |
| | P-170625 | Spiral Gear | | | | | | | | | | | | | | | | | | | | | | | | | |
| 310 | No. 5 | Woodruff Key | | | | | |√|√| | |√|√| | | | |√| |√| |√|√| | | | |
| 311 | P-147205 | Gear Case | | | | | | | | | | |√| | | | | | | | | | | | | | |
| | P-147207 | Gear Case | | | | | |√|√| | |√| | | | | | | | | | | | | | | |
| | P-154384 | Gear Case | | | | | | | | | | | | | | | | | | | | | | | | | |
| | P-154386 | Gear Case | | | | | | | | | | | | | | | |√| | | | | | | | | |
| | P-170230 | Gear Case | | | | | | | | | | | | | | | | | | | | | | | | | |
| | P-170232 | Gear Case | | | | | | | | | | | | | | | | | |√| |√|√| | | | |
| | P-170235 | Gear Case | | | | | | | | | | | | | | | | | | | | | | | | | |
| | P-170432 | Gear Case | | | | | | | | | | | | | | | | | | | | | | | | | |
| | P-170483 | Gear Case | | | | | | | | | | | | | | | | | | | | | | | | | |
| | P-170628 | Gear Case | | | | | | | | | | | | | | | | | | | | | | | | | |

| ITEM NO. | PIECE PART NUMBER | NAME | 20A | 20B | 20C | 20D | 20G | 20H | 21A | 21B | 21C | 21D | 21E | 21F | 21G | 21H | 21R | 22A | 22B | 22C | 23A | 23B | 23C | 23D | 23F | 23G | 23H | 23J | 23K | 23L | 23T |
|---|---|---|---|---|---|---|---|---|---|---|---|---|---|---|---|---|---|---|---|---|---|---|---|---|---|---|---|---|---|---|---|
| 300 | P-147223 | Roll Guard | | | | | | | | | | | | | | | | | | | | | | | | | | | | |
| | P-154451 | Roll Guard |√| |√| |√| | | | | | | | | |√| | | |√| |√| |√|√| |√| |√|√|
| 301 | P-170063 | Screw | | | | | | | | | | | | | | | | | | | | | | | | | | | | |
| | P-143360 | Screw |√| |√| |√| | | | | | | | | |√| | | |√| |√| |√|√| |√| |√|√|
| 302 | P-147210 | Gear Case Cover (upper) | | | | | | | | | | | | | | | | | | | | | | | | | | | | |
| | P-147212 | Gear Case Cover (upper) | | | | | | | | | | | | | | | | | | | | | | | | | | | | |
| | P-170627 | Gear Case Cover | | | | | | | | | | | | | | | | | | | | | | | | | | | | |
| | P-154390 | Gear Case Cover (upper) | | | | | | | | | | | | | | | | | | | | | | | | | | | | |
| | P-170210 | Gear Case Cover (upper) |√| |√| |√| | | | | | | | | | | | | |√| |√| |√|√| |√| |√|√|
| | P-170236 | Gear Case Cover (upper) | | | | | | | | | | | | | | | | | | | | | | | | | | | | |
| | P-170562 | Gear Case Cover (upper) | | | | | | | | | | | | | | | | | | | | | | | | | | | | |
| | P-170564 | Gear Case Cover (upper) | | | | | | | | | | | | | | | | | | | | | | | | | | | | |
| 303 | P-147211 | Gear Case Cover (lower) | | | | | | | | | | | | | | | | | | | | | | | | | | | | |
| | P-154404 | Gear Case Cover (lower) |√| |√| |√| | | | | | | | | | | | | |√| |√| |√|√| |√| |√|√|
| 304 | P-201421 | Screw |√| | | | | | |√|√| | | | | | | | | |√| |√| |√| | | | | | |
| | P-170280 | Screw | | |√| |√| | | | | |√|√|√|√|√| | |√| | | | | |√| |√| |√|√|
| 305 | P-143360 | Screw |√| |√| |√| | | | | | | | | | | | | |√| |√| |√|√| |√| |√|√|
| | P-170275 | Screw | | | | | | | | | | | | | | | | | | | | | | | | | | | | |
| 306 | P-154746 | Shaft | | | | | | | | | | | | | | | | | | | | | | | | | | | | |
| | P-154747 | Shaft |√| | | | | | | | | | | | | | | | | |√| |√| |√| | | | | | |
| | P-170206 | Shaft | | |√| |√| | | | | | | | | | | | | | | | | | |√| |√| |√|√|
| | P-170240 | Shaft | | | | | | | | | | | | | | | | | | | | | | | | | | | | |
| | P-170378 | Shaft | | | | | | | | | | | | | | | | | | | | | | | | | | | | |
| | P-170435 | Shaft | | | | | | | | | | | | | | | | | | | | | | | | | | | | |
| 307 | P-147236 | Gasket | | | | | | | | | | | | | | | | | | | | | | | | | | | | |
| | P-147239 | Gasket | | | | | | | | | | | | | | | | | | | | | | | | | | | | |
| | P-154376 | Gasket | | | | | | | | | | | | | | | | | | | | | | | | | | | | |
| | P-154447 | Gasket |√| |√| |√| | | | | | | | | | | | | |√| |√| |√|√| |√| |√|√|
| 308 | P-146220 | Spiral Gear |√| |√| |√| | | | | | | | | | | | | |√| |√| |√|√| |√| |√|√|
| 309 | P-146219 | Spiral Gear | | | | | | | | | | | | | | | | | | | | | | | | | | | | |
| | P-147226 | Spiral Gear |√| |√| |√| | | | | | | | | | | | | |√| |√| |√|√| |√| |√|√|
| | P-170459 | Spiral Gear | | | | | | | | | | | | | | | | | | | | | | | | | | | | |
| | P-170493 | Spiral Gear | | | | | | | | | | | | | | | | | | | | | | | | | | | | |
| | P-170625 | Spiral Gear | | | | | | | | | | | | | | | | | | | | | | | | | | | | |
| 310 | No. 5 | Woodruff Key |√| |√| |√| | | | | | | | | | | | | |√| |√| |√|√| |√| |√|√|
| 311 | P-147205 | Gear Case | | | | | | | | | | | | | | | | | | | | | | | | | | | | |
| | P-147207 | Gear Case | | | | | | | | | | | | | | | | | | | | | | | | | | | | |
| | P-154384 | Gear Case | | | | | | | | | | | | | | | | | | | | | | | | | | | | |
| | P-154386 | Gear Case |√| | | | | | | | | | | | | | | | | |√| |√| |√| | | | | | |
| | P-170230 | Gear Case | | | | | | | | | | | | | | | | | | | | | | | | | | | | |
| | P-170232 | Gear Case | | |√| |√| | | | | | | | | | | | | | | | | | |√| |√| |√|√|
| | P-170235 | Gear Case | | | | | | | | | | | | | | | | | | | | | | | | | | | | |
| | P-170432 | Gear Case | | | | | | | | | | | | | | | | | | | | | | | | | | | | |
| | P-170483 | Gear Case | | | | | | | | | | | | | | | | | | | | | | | | | | | | |
| | P-170628 | Gear Case | | | | | | | | | | | | | | | | | | | | | | | | | | | | |

| ITEM NO. | PIECE PART NUMBER | NAME | 23U | 23W | 24A | 24B | 24C | 24D | 24E | 24F | 25A | 25B | 25E | 26A | 26B | 26C | 26D | 26G | 26H | 35A | 45A | 46A | 47A | 48A | 49A |
|---|---|---|---|---|---|---|---|---|---|---|---|---|---|---|---|---|---|---|---|---|---|---|---|---|---|
| 300 | P-147223 | Roll Guard | | | | | | | | | | | | | | | | | | | | | | | |
| | P-154451 | Roll Guard | | |√| |√| |√| | | | |√| |√| |√| | | | | | | |√|
| 301 | P-170063 | Screw | | | | | | | | | | | | | | | | | | | | | | | |
| | P-143360 | Screw | | |√| |√| |√| | | | |√| |√| |√| | | | | | | |√|
| 302 | P-147210 | Gear Case Cover (upper) | | | | | | | | | | | | | | | | | | | | | | | |
| | P-147212 | Gear Case Cover (upper) | | | | | | | | | | | | | | | | | | | | | | | |
| | P-170627 | Gear Case Cover | | | | | | | | | | | | | | | | | | | | | | |√|
| | P-154390 | Gear Case Cover (upper) | | |√| |√| | | | | | | | | | | | | | | | | | |
| | P-170210 | Gear Case Cover (upper) | | | | | | | | | | | |√| |√| |√| | | | | | | |
| | P-170236 | Gear Case Cover (upper) | | | | | | |√| | | | | | | | | | | | | | | | |
| | P-170562 | Gear Case Cover (upper) | | | | | | | | | | | | | | | | | | | |√| | | |
| | P-170564 | Gear Case Cover (upper) | | | | | | | | | | | | | | | | | | | | | |√| |
| 303 | P-147211 | Gear Case Cover (lower) | | | | | | | | | | | | | | | | | | | | | | | |
| | P-154404 | Gear Case Cover (lower) | | |√| |√| |√| | | | |√| |√| |√| | | | | | | |
| 304 | P-201421 | Screw | | |√| |√| | | | | | |√| | | | | | | | | | | |
| | P-170280 | Screw | | | | | | |√| | |√|√| | |√| |√| |√| | | | |√|
| 305 | P-143360 | Screw | | |√| |√| | | | | | |√| |√| |√| | | |√| |√|√|
| | P-170275 | Screw | | | | | | | | | | | | | | | | | | |√| |√| |
| 306 | P-154746 | Shaft | | |√| |√| | | | | | | | | | | | | | | | | | |
| | P-154747 | Shaft | | | | | | | | | | | |√| | | | | | | | | | | |
| | P-170206 | Shaft | | | | | | | | | | | | | |√| |√| | | | | | | |
| | P-170240 | Shaft | | | | | | |√| | | | | | | | | | | | | | | | |
| | P-170378 | Shaft | | | | | | | | | | | | | | | | | | | | | | |√|
| | P-170435 | Shaft | | | | | | | | | | | | | | | | | | |√| |√| |
| 307 | P-147236 | Gasket | | | | | | | | | | | | | | | | | | | | | | | |
| | P-147239 | Gasket | | | | | | | | | | | | | | | | | | | | | | | |
| | P-154376 | Gasket | | |√| |√| |√| | | | | | | | | | | | | | | | |
| | P-154447 | Gasket | | | | | | | | | | | |√| |√| |√| | | | | | | |
| 308 | P-146220 | Spiral Gear | | |√| |√| |√| | | | |√| |√| |√| | | | | | | |√|
| 309 | P-146219 | Spiral Gear | | |√| |√| |√| | | | | | | | | | | | | | | | |
| | P-147226 | Spiral Gear | | | | | | | | | | | |√| |√| |√| | | | | | | |
| | P-170459 | Spiral Gear | | | | | | | | | | | | | | | | | | | |√| | | |
| | P-170493 | Spiral Gear | | | | | | | | | | | | | | | | | | | | | |√| |
| | P-170625 | Spiral Gear | | | | | | | | | | | | | | | | | | | | | | |√|
| 310 | No. 5 | Woodruff Key | | |√| |√| |√| | | | |√| |√| |√| | | |√| |√|√|
| 311 | P-147205 | Gear Case | | | | | | | | | | | | | | | | | | | | | | | |
| | P-147207 | Gear Case | | | | | | | | | | | | | | | | | | | | | | | |
| | P-154384 | Gear Case | | |√| | | | | | | | | | | | | | | | | | | | |
| | P-154386 | Gear Case | | | | | | | | | | | |√| | | | | | | | | | | |
| | P-170230 | Gear Case | | | | |√| | | | | | | | | | | | | | | | | | |
| | P-170232 | Gear Case | | | | | | | | | | | | | |√| |√| | | | | | | |
| | P-170235 | Gear Case | | | | | | |√| | | | | | | | | | | | | | | | |
| | P-170432 | Gear Case | | | | | | | | | | | | | | | | | | | |√| | | |
| | P-170483 | Gear Case | | | | | | | | | | | | | | | | | | | | | |√| |
| | P-170628 | Gear Case | | | | | | | | | | | | | | | | | | | | | | |√|

**DRIVE CODE - GEAR CASE - NON WORM END**

| ITEM NO. | PIECE PART NUMBER | NAME | 1A | 1C | 1D | 1E | 2A | 3A | 3C | 3D | 3E | 3F | 4A | 4B | 17A | 17B | 17E | 18A | 18B | 18C | 18D | 18G | 18H | 18J | 19A | 19B | 19E | 20A | 20B | 20C | 20D | 20G | 20H | 21A | 21B | 21C | 21D | 21E | 21F | 21G | 21H | 21R | 22A | 22B | 22C |
|---|---|---|---|---|---|---|---|---|---|---|---|---|---|---|---|---|---|---|---|---|---|---|---|---|---|---|---|---|---|---|---|---|---|---|---|---|---|---|---|---|---|---|---|---|---|
| 312 | 3/8"-16 x 1/2" | Bristo Set Screw-Cup Point | | | | | | √ | √ | | | √ | √ | | | | | √ | | √ | | √ | √ | | | | | √ | | √ | | √ | | | | | | | | | | | | | |
| 313 | 3/8"-16 x 1/4" | Bristo Set Screw-Cup Point | | | | | | √ | √ | | | √ | √ | | | | | √ | | √ | | √ | √ | | | | | √ | | √ | | √ | | | | | | | | | | | | | |
| 314 | P-147218 | Pump Casing | | | | | | √ | √ | | | √ | √ | | | | | | | | | | | | | | | | | | | | | | | | | | | | | | | | |
| | P-154735 | Pump Casing | | | | | | | | | | | | | | | | √ | | | | | | | | | | √ | | | | | | | | | | | | | | | | | |
| | P-170198 | Pump Casing | | | | | | | | | | | | | | | | | | √ | | √ | √ | | | | | | | √ | | √ | | | | | | | | | | | | | |
| | P-170391 | Pump Casing | | | | | | | | | | | | | | | | | | | | | | | | | | | | | | | | | | | | | | | | | | | |
| 315 | P-154736 | Shaft | | | | | | | | | | | | | | | | √ | | | | | | | | | | √ | | | | | | | | | | | | | | | | | |
| | P-170201 | Shaft | | | | | | | | | | | | | | | | | | √ | | √ | √ | | | | | | | √ | | √ | | | | | | | | | | | | | |
| 316 | P-154738 | Gear | | | | | | √ | √ | | | √ | √ | | | | | √ | | | | | | | | | | √ | | | | | | | | | | | | | | | | | |
| | P-170200 | Gear | | | | | | | | | | | | | | | | | | √ | | √ | √ | | | | | | | √ | | √ | | | | | | | | | | | | | |
| 317 | P-154737 | Gear | | | | | | √ | √ | | | √ | √ | | | | | √ | | | | | | | | | | √ | | | | | | | | | | | | | | | | | |
| | P-170199 | Gear | | | | | | | | | | | | | | | | | | √ | | √ | √ | | | | | | | √ | | √ | | | | | | | | | | | | | |
| 318 | No. 1 | Woodruff Key | | | | | | √ | √ | | | √ | √ | | | | | √ | | | | | | | | | | √ | | | | | | | | | | | | | | | | | |
| | P-170204 | Key | | | | | | | | | | | | | | | | | | √ | | √ | √ | | | | | | | √ | | √ | | | | | | | | | | | | | |
| | P-170445 | Key | | | | | | | | | | | | | | | | | | | | | | | | | | | | | | | | | | | | | | | | | | | |
| 319 | P-147227 | Spiral Gear | | | | | | √ | √ | | | √ | √ | | | | | √ | | √ | | √ | √ | | | | | √ | | √ | | √ | | | | | | | | | | | | | |
| 320 | 3/32"x3/4" | Cotter Pin (steel) | | | | | | √ | √ | | | √ | √ | | | | | √ | | √ | | √ | √ | | | | | √ | | √ | | √ | | | | | | | | | | | | | |
| 321 | 7/16"-20 | S.A.E. Castellated Nut | | | | | | √ | √ | | | √ | √ | | | | | √ | | √ | | √ | √ | | | | | √ | | √ | | √ | | | | | | | | | | | | | |
| 322 | P-146251 | Washer | | | | | | √ | √ | | | √ | √ | | | | | √ | | √ | | √ | √ | | | | | √ | | √ | | √ | | | | | | | | | | | | | |
| 323 | No. 5 | Woodruff Key | | | | | | √ | √ | | | √ | √ | | | | | √ | | √ | | √ | √ | | | | | √ | | √ | | √ | | | | | | | | | | | | | |
| 324 | No. 3 | Woodruff Key | | | | | | √ | √ | | | √ | √ | | | | | √ | | √ | | √ | √ | | | | | √ | | √ | | √ | | | | | | | | | | | | | |
| 325 | P-146215 | Spiral Gear | | | | | | √ | √ | | | √ | √ | | | | | √ | | √ | | √ | √ | | | | | √ | | √ | | √ | | | | | | | | | | | | | |
| 326 | P-143360 | Screw | | | | | | | | | | | | | | | | √ | | √ | | √ | √ | | | | | √ | | √ | | √ | | | | | | | | | | | | | |
| 327 | P-170622 | Helical Gear | | | | | | | | | | | | | | | | | | | | | | | | | | | | | | | | | | | | | | | | | | | |
| 328 | No. 3 | Woodruff Key | | | | | | | | | | | | | | | | | | | | | | | | | | | | | | | | | | | | | | | | | | | |
| 329 | P-170621 | Screw | | | | | | | | | | | | | | | | | | | | | | | | | | | | | | | | | | | | | | | | | | | |
| 330 | No. 1122 | Shakeproof Lock Washer | | | | | | | | | | | | | | | | | | | | | | | | | | | | | | | | | | | | | | | | | | | |
| 331 | P-170456 | Washer (steel) | | | | | | | | | | | | | | | | | | | | | | | | | | | | | | | | | | | | | | | | | | | |
| 332 | P-170455 | Washer (phos. bronze) | | | | | | | | | | | | | | | | | | | | | | | | | | | | | | | | | | | | | | | | | | | |
| 333 | P-170623 | Helical Gear | | | | | | | | | | | | | | | | | | | | | | | | | | | | | | | | | | | | | | | | | | | |
| 334 | P-170457 | Helical Gear | | | | | | | | | | | | | | | | | | | | | | | | | | | | | | | | | | | | | | | | | | | |
| | P-170497 | Helical Gear | | | | | | | | | | | | | | | | | | | | | | | | | | | | | | | | | | | | | | | | | | | |
| | P-170624 | Helical Gear | | | | | | | | | | | | | | | | | | | | | | | | | | | | | | | | | | | | | | | | | | | |
| 335 | P-170626 | Shaft | | | | | | | | | | | | | | | | | | | | | | | | | | | | | | | | | | | | | | | | | | | |
| | P-170437 | Shaft | | | | | | | | | | | | | | | | | | | | | | | | | | | | | | | | | | | | | | | | | | | |
| 336 | P-146255 | Thrust Collar | | | | | | | | | | | | | | | | | | | | | | | | | | | | | | | | | | | | | | | | | | | |
| 337 | P-146256 | Set Screw Spring Clip | | | | | | | | | | | | | | | | | | | | | | | | | | | | | | | | | | | | | | | | | | | |
| 338 | 3/8"-16 x 3/8" | Bristo Set Screw-Cup Point | | | | | | | | | | | | | | | | | | | | | | | | | | | | | | | | | | | | | | | | | | | |
| 339 | P-137907 | Washer (steel) | | | | | | √ | √ | | | √ | √ | | | | | √ | | √ | | √ | √ | | | | | √ | | √ | | √ | | | | | | | | | | | | | |
| 340 | P-137908 | Washer (phos. bronze) | | | | | | √ | √ | | | √ | √ | | | | | √ | | √ | | √ | √ | | | | | √ | | √ | | √ | | | | | | | | | | | | | |
| 341 | P-170387 | Spiral Gear | | | | | | | | | | | | | | | | | | | | | | | | | | | | | | | | | | | | | | | | | | | |

| ITEM NO. | PIECE PART NUMBER | NAME | 23A | 23B | 23C | 23D | 23F | 23G | 23H | 23J | 23K | 23L | 23T | 23U | 23W | 24A | 24B | 24C | 24D | 24E | 24F | 25A | 25B | 25E | 26A | 26B | 26C | 26D | 26G | 26H | 35A | 45A | 46A | 47A | 48A | 49A |
|---|---|---|---|---|---|---|---|---|---|---|---|---|---|---|---|---|---|---|---|---|---|---|---|---|---|---|---|---|---|---|---|---|---|---|---|---|
| 312 | 3/8"-16 x 1/2" | Bristo Set Screw-Cup Point | √ | | √ | | √ | √ | | √ | | √ | √ | | | √ | | √ | | √ | | | | | √ | | √ | | √ | | | | | | | √ |
| 313 | 3/8"-16 x 1/4" | Bristo Set Screw-Cup Point | √ | | √ | | √ | √ | | √ | | √ | √ | | | √ | | √ | | √ | | | | | √ | | √ | | √ | | | | | | | √ |
| 314 | P-147218 | Pump Casing | | | | | | | | | | | | | | | | | | | | | | | | | | | | | | | | | | |
| | P-154735 | Pump Casing | √ | | √ | | √ | | | | | | | | | √ | | √ | | | | | | | √ | | | | | | | | | | | |
| | P-170198 | Pump Casing | | | | | | √ | | √ | | √ | √ | | | | | | | √ | | | | | | | √ | | √ | | | | | | | |
| | P-170391 | Pump Casing | | | | | | | | | | | | | | | | | | | | | | | | | | | | | | | | | | √ |
| 315 | P-154736 | Shaft | √ | | √ | | √ | | | | | | | | | √ | | √ | | | | | | | √ | | | | | | | | | | | |
| | P-170201 | Shaft | | | | | | √ | | √ | | √ | √ | | | | | | | √ | | | | | | | √ | | √ | | | | √ | | √ | √ |
| 316 | P-154738 | Gear | √ | | √ | | √ | | | | | | | | | √ | | √ | | | | | | | √ | | | | | | | | | | | |
| | P-170200 | Gear | | | | | | √ | | √ | | √ | √ | | | | | | | √ | | | | | | | √ | | √ | | | | √ | | √ | √ |
| 317 | P-154737 | Gear | √ | | √ | | √ | | | | | | | | | √ | | √ | | | | | | | √ | | | | | | | | | | | |
| | P-170199 | Gear | | | | | | √ | | √ | | √ | √ | | | | | | | √ | | | | | | | √ | | √ | | | | √ | | √ | √ |
| 318 | No. 1 | Woodruff Key | √ | | √ | | √ | | | | | | | | | √ | | √ | | | | | | | √ | | | | | | | | | | | |
| | P-170204 | Key | | | | | | √ | | √ | | √ | √ | | | | | | | √ | | | | | | | √ | | √ | | | | | | | √ |
| | P-170445 | Key | | | | | | | | | | | | | | | | | | | | | | | | | | | | | | | √ | | √ | |
| 319 | P-147227 | Spiral Gear | √ | | √ | | √ | √ | | √ | | √ | √ | | | √ | | √ | | √ | | | | | √ | | √ | | √ | | | | | | | |
| 320 | 3/32"x3/4" | Cotter Pin (steel) | √ | | √ | | √ | √ | | √ | | √ | √ | | | √ | | √ | | √ | | | | | √ | | √ | | √ | | | | | | | √ |
| 321 | 7/16"-20 | S.A.E. Castellated Nut | √ | | √ | | √ | √ | | √ | | √ | √ | | | √ | | √ | | √ | | | | | √ | | √ | | √ | | | | | | | √ |
| 322 | P-146251 | Washer | √ | | √ | | √ | √ | | √ | | √ | √ | | | √ | | √ | | √ | | | | | √ | | √ | | √ | | | | | | | √ |
| 323 | No. 5 | Woodruff Key | √ | | √ | | √ | √ | | √ | | √ | √ | | | √ | | √ | | √ | | | | | √ | | √ | | √ | | | | | | | √ |
| 324 | No. 3 | Woodruff Key | √ | | √ | | √ | √ | | √ | | √ | √ | | | √ | | √ | | √ | | | | | √ | | √ | | √ | | | | | | | |
| 325 | P-146215 | Spiral Gear | √ | | √ | | √ | √ | | √ | | √ | √ | | | √ | | √ | | √ | | | | | √ | | √ | | √ | | | | | | | |
| 326 | P-143360 | Screw | √ | | √ | | √ | √ | | √ | | √ | √ | | | √ | | √ | | √ | | | | | √ | | √ | | √ | | | | | | | √ |
| 327 | P-170622 | Helical Gear | | | | | | | | | | | | | | | | | | | | | | | | | | | | | | | | | | √ |
| 328 | No. 3 | Woodruff Key | | | | | | | | | | | | | | | | | | | | | | | | | | | | | | | | | | √ |
| 329 | P-170621 | Screw | | | | | | | | | | | | | | | | | | | | | | | | | | | | | | | | | | √ |
| 330 | No. 1122 | Shakeproof Lock Washer | | | | | | | | | | | | | | | | | | | | | | | | | | | | | | | | | | √ |
| 331 | P-170456 | Washer (steel) | | | | | | | | | | | | | | | | | | | | | | | | | | | | | | | | | | √ |
| 332 | P-170455 | Washer (phos. bronze) | | | | | | | | | | | | | | | | | | | | | | | | | | | | | | | | | | √ |
| 333 | P-170623 | Helical Gear | | | | | | | | | | | | | | | | | | | | | | | | | | | | | | | | | | √ |
| 334 | P-170457 | Helical Gear | | | | | | | | | | | | | | | | | | | | | | | | | | | | | | | √ | | | |
| | P-170497 | Helical Gear | | | | | | | | | | | | | | | | | | | | | | | | | | | | | | | | | √ | |
| | P-170624 | Helical Gear | | | | | | | | | | | | | | | | | | | | | | | | | | | | | | | | | | √ |
| 335 | P-170626 | Shaft | | | | | | | | | | | | | | | | | | | | | | | | | | | | | | | | | | √ |
| | P-170437 | Shaft | | | | | | | | | | | | | | | | | | | | | | | | | | | | | | | √ | | √ | |
| 336 | P-146255 | Thrust Collar | | | | | | | | | | | | | | | | | | | | | | | | | | | | | | | √ | | √ | √ |
| 337 | P-146256 | Set Screw Spring Clip | | | | | | | | | | | | | | | | | | | | | | | | | | | | | | | √ | | √ | √ |
| 338 | 3/8"-16 x 3/8" | Bristo Set Screw-Cup Point | | | | | | | | | | | | | | | | | | | | | | | | | | | | | | | √ | | √ | √ |
| 339 | P-137907 | Washer (steel) | √ | | √ | | √ | √ | | √ | | √ | √ | | | √ | | √ | | √ | | | | | √ | | √ | | √ | | | | √ | | √ | √ |
| 340 | P-137908 | Washer (phos. bronze) | √ | | √ | | √ | √ | | √ | | √ | √ | | | √ | | √ | | √ | | | | | √ | | √ | | √ | | | | √ | | √ | √ |
| 341 | P-170387 | Spiral Gear | | | | | | | | | | | | | | | | | | | | | | | | | | | | | | | | | | √ |

| ITEM NO. | PIECE PART NUMBER | NAME | DRIVE CODE - GEAR CASE - NON WORM END |  |  |  |  |  |  |  |  |  |  |  |  |  |  |  |  |  |  |  |  |  |  |  |  |  |  |  |  |  |  |  |  |  |  |  |  |  |  |  |  |  |  |  |  |  |  |  |  |  |  |  |  |  |  |  |  |  |  |  |  |  |  |  |  |  |  |  |  |  |  |  |  |  |
|---|---|---|---|---|---|---|---|---|---|---|---|---|---|---|---|---|---|---|---|---|---|---|---|---|---|---|---|---|---|---|---|---|---|---|---|---|---|---|---|---|---|---|---|---|---|---|---|---|---|---|---|---|---|---|---|---|---|---|---|---|---|---|---|---|---|---|---|---|---|---|---|---|---|---|---|---|---|---|---|
|  |  |  | 1A | 1C | 1D | 1E | 2A | 3A | 3C | 3D | 3E | 3F | 4A | 4B | 17A | 17B | 17E | 18A | 18B | 18C | 18D | 18G | 18H | 18J | 19A | 19B | 19E | 20A | 20B | 20C | 20D | 20G | 20H | 21A | 21B | 21C | 21D | 21E | 21F | 21G | 21H | 21R | 22A | 22B | 22C | 23A | 23B | 23C | 23D | 23F | 23G | 23H | 23J | 23K | 23L | 23T | 23U | 23W | 24A | 24B | 24C | 24D | 24E | 24F | 25A | 25B | 25E | 26A | 26B | 26C | 26D | 26G | 26H | 35A | 45A | 46A | 47A | 48A | 49A |
| 342 | P-170479 | Pipe Plug |  |  |  |  |  | √ | √ |  |  | √ | √ |  |  |  |  | √ |  | √ |  | √ | √ |  |  |  |  | √ |  | √ |  | √ |  |  |  |  |  |  |  |  |  |  |  |  |  | √ |  | √ |  | √ | √ |  | √ |  | √ | √ |  |  | √ |  | √ |  | √ |  |  |  |  | √ |  | √ |  | √ |  |  |  |  |  |  |  |
| 343 | P-290150 | Plug |  |  |  |  |  | √ | √ |  |  | √ | √ |  |  |  |  | √ |  | √ |  | √ | √ |  |  |  |  | √ |  | √ |  | √ |  |  |  |  |  |  |  |  |  |  |  |  |  | √ |  | √ |  | √ | √ |  | √ |  | √ | √ |  |  | √ |  | √ |  | √ |  |  |  |  | √ |  | √ |  | √ |  |  |  |  |  |  |  |
| 344 | P-170477 | Plug |  |  |  |  |  |  |  |  |  |  |  |  |  |  |  |  |  | √ |  | √ | √ |  |  |  |  |  |  | √ |  | √ |  |  |  |  |  |  |  |  |  |  |  |  |  |  |  |  |  | √ |  | √ |  | √ | √ |  |  |  |  |  |  | √ |  |  |  |  |  |  | √ |  | √ |  |  |  | √ |  | √ | √ |
| 345 | P-170581 | Washer |  |  |  |  |  |  |  |  |  |  |  |  |  |  |  |  |  | √ |  | √ | √ |  |  |  |  |  |  | √ |  | √ |  |  |  |  |  |  |  |  |  |  |  |  |  |  |  |  |  | √ |  | √ |  | √ | √ |  |  |  |  |  |  | √ |  |  |  |  |  |  | √ |  | √ |  |  |  | √ |  | √ | √ |
| 346 | P-173656 | Plug |  |  |  |  |  |  |  |  |  |  |  |  |  |  |  |  |  | √ |  | √ | √ |  |  |  |  |  |  | √ |  | √ |  |  |  |  |  |  |  |  |  |  |  |  |  |  |  |  |  | √ |  | √ |  | √ | √ |  |  |  |  |  |  | √ |  |  |  |  |  |  | √ |  | √ |  |  |  | √ |  | √ | √ |
| 347 | P-147229 | Spiral Gear |  |  |  |  |  |  |  |  |  |  | √ |  |  |  |  |  |  |  |  |  |  |  |  |  |  |  |  |  |  |  |  |  |  |  |  |  |  |  |  |  |  |  |  |  |  |  |  |  |  |  |  |  |  |  |  | √ |  | √ |  | √ |  |  |  |  |  |  |  |  |  |  |  |  |  |  |  |  |
| 348 | P-147230 | Spiral Gear |  |  |  |  |  |  |  |  |  |  | √ |  |  |  |  |  |  |  |  |  |  |  |  |  |  |  |  |  |  |  |  |  |  |  |  |  |  |  |  |  |  |  |  |  |  |  |  |  |  |  |  |  |  |  |  | √ |  | √ |  | √ |  |  |  |  |  |  |  |  |  |  |  |  |  |  |  |  |
| 349 | P-146217 | Helical Gear |  |  |  |  |  |  |  |  |  |  | √ |  |  |  |  |  |  |  |  |  |  |  |  |  |  |  |  |  |  |  |  |  |  |  |  |  |  |  |  |  |  |  |  |  |  |  |  |  |  |  |  |  |  |  |  | √ |  | √ |  | √ |  |  |  |  |  |  |  |  |  |  |  |  |  |  |  |  |
|  | P-170492 | Helical Gear |  |  |  |  |  |  |  |  |  |  |  |  |  |  |  |  |  |  |  |  |  |  |  |  |  |  |  |  |  |  |  |  |  |  |  |  |  |  |  |  |  |  |  |  |  |  |  |  |  |  |  |  |  |  |  |  |  |  |  |  |  |  |  |  |  |  |  |  |  |  |  |  |  |  | √ |  |
| 350 | P-146238 | Gear Stud |  |  |  |  |  |  |  |  |  |  | √ |  |  |  |  |  |  |  |  |  |  |  |  |  |  |  |  |  |  |  |  |  |  |  |  |  |  |  |  |  |  |  |  |  |  |  |  |  |  |  |  |  |  |  |  | √ |  | √ |  | √ |  |  |  |  |  |  |  |  |  |  |  |  |  |  | √ |  |
| 351 | P-146247 | Gear Stud Sleeve |  |  |  |  |  |  |  |  |  |  | √ |  |  |  |  |  |  |  |  |  |  |  |  |  |  |  |  |  |  |  |  |  |  |  |  |  |  |  |  |  |  |  |  |  |  |  |  |  |  |  |  |  |  |  |  | √ |  | √ |  | √ |  |  |  |  |  |  |  |  |  |  |  |  |  |  | √ |  |
| 352 | No. 3 | Woodruff Key |  |  |  |  |  |  |  |  |  |  | √ |  |  |  |  |  |  |  |  |  |  |  |  |  |  |  |  |  |  |  |  |  |  |  |  |  |  |  |  |  |  |  |  |  |  |  |  |  |  |  |  |  |  |  |  | √ |  | √ |  | √ |  |  |  |  |  |  |  |  |  |  |  |  |  |  | √ |  |
| 353 | P-146218 | Spiral Gear |  |  |  |  |  |  |  |  |  |  | √ |  |  |  |  |  |  |  |  |  |  |  |  |  |  |  |  |  |  |  |  |  |  |  |  |  |  |  |  |  |  |  |  |  |  |  |  |  |  |  |  |  |  |  |  | √ |  | √ |  | √ |  |  |  |  |  |  |  |  |  |  |  |  |  |  |  |  |
|  | P-170491 | Helical Gear |  |  |  |  |  |  |  |  |  |  |  |  |  |  |  |  |  |  |  |  |  |  |  |  |  |  |  |  |  |  |  |  |  |  |  |  |  |  |  |  |  |  |  |  |  |  |  |  |  |  |  |  |  |  |  |  |  |  |  |  |  |  |  |  |  |  |  |  |  |  |  |  |  |  | √ |  |
| 354 | 3/32"x3/4" | Cotter Pin (steel) |  |  |  |  |  |  |  |  |  |  | √ |  |  |  |  |  |  |  |  |  |  |  |  |  |  |  |  |  |  |  |  |  |  |  |  |  |  |  |  |  |  |  |  |  |  |  |  |  |  |  |  |  |  |  |  | √ |  | √ |  | √ |  |  |  |  |  |  |  |  |  |  |  |  |  |  | √ |  |
| 355 | 7/16"-20 | S.A.E. Castellated Nut |  |  |  |  |  |  |  |  |  |  | √ |  |  |  |  |  |  |  |  |  |  |  |  |  |  |  |  |  |  |  |  |  |  |  |  |  |  |  |  |  |  |  |  |  |  |  |  |  |  |  |  |  |  |  |  | √ |  | √ |  | √ |  |  |  |  |  |  |  |  |  |  |  |  |  |  | √ |  |
| 356 | P-146239 | Gear Stud Washer |  |  |  |  |  |  |  |  |  |  | √ |  |  |  |  |  |  |  |  |  |  |  |  |  |  |  |  |  |  |  |  |  |  |  |  |  |  |  |  |  |  |  |  |  |  |  |  |  |  |  |  |  |  |  |  | √ |  | √ |  | √ |  |  |  |  |  |  |  |  |  |  |  |  |  |  | √ |  |
| 357 | P-170063 | Screw |  |  |  |  |  |  |  |  |  |  |  |  |  |  |  |  |  | √ |  | √ | √ |  |  |  |  |  |  | √ |  | √ |  |  |  |  |  |  |  |  |  |  |  |  |  |  |  |  |  | √ |  | √ |  | √ | √ |  |  |  |  |  |  | √ |  |  |  |  |  |  | √ |  | √ |  |  |  |  |  |  | √ |
| 358 | P-170063 | Screw |  |  |  |  |  |  |  |  |  |  |  |  |  |  |  |  |  |  |  |  |  |  |  |  |  |  |  |  |  |  |  |  |  |  |  |  |  |  |  |  |  |  |  |  |  |  |  |  |  |  |  |  |  |  |  |  |  |  |  |  |  |  |  |  |  |  |  |  |  |  |  | √ |  | √ |  |
| 359 | P-170449 | Cover |  |  |  |  |  |  |  |  |  |  |  |  |  |  |  |  |  |  |  |  |  |  |  |  |  |  |  |  |  |  |  |  |  |  |  |  |  |  |  |  |  |  |  |  |  |  |  |  |  |  |  |  |  |  |  |  |  |  |  |  |  |  |  |  |  |  |  |  |  |  |  | √ |  | √ |  |
| 360 | 3/32"x3/4" | Cotter Pin (steel) |  |  |  |  |  |  |  |  |  |  |  |  |  |  |  |  |  |  |  |  |  |  |  |  |  |  |  |  |  |  |  |  |  |  |  |  |  |  |  |  |  |  |  |  |  |  |  |  |  |  |  |  |  |  |  |  |  |  |  |  |  |  |  |  |  |  |  |  |  |  |  | √ |  | √ |  |
| 361 | 3/8"-24 | S.A.E. Castellated Nut |  |  |  |  |  |  |  |  |  |  |  |  |  |  |  |  |  |  |  |  |  |  |  |  |  |  |  |  |  |  |  |  |  |  |  |  |  |  |  |  |  |  |  |  |  |  |  |  |  |  |  |  |  |  |  |  |  |  |  |  |  |  |  |  |  |  |  |  |  |  |  | √ |  | √ |  |
| 362 | P-170454 | Helical Gear |  |  |  |  |  |  |  |  |  |  |  |  |  |  |  |  |  |  |  |  |  |  |  |  |  |  |  |  |  |  |  |  |  |  |  |  |  |  |  |  |  |  |  |  |  |  |  |  |  |  |  |  |  |  |  |  |  |  |  |  |  |  |  |  |  |  |  |  |  |  |  | √ |  | √ |  |
| 363 | P-170438 | Washer |  |  |  |  |  |  |  |  |  |  |  |  |  |  |  |  |  |  |  |  |  |  |  |  |  |  |  |  |  |  |  |  |  |  |  |  |  |  |  |  |  |  |  |  |  |  |  |  |  |  |  |  |  |  |  |  |  |  |  |  |  |  |  |  |  |  |  |  |  |  |  | √ |  | √ |  |
| 364 | P-170456 | Washer (steel) |  |  |  |  |  |  |  |  |  |  |  |  |  |  |  |  |  |  |  |  |  |  |  |  |  |  |  |  |  |  |  |  |  |  |  |  |  |  |  |  |  |  |  |  |  |  |  |  |  |  |  |  |  |  |  |  |  |  |  |  |  |  |  |  |  |  |  |  |  |  |  | √ |  | √ |  |
| 365 | P-170455 | Washer (phos. bronze) |  |  |  |  |  |  |  |  |  |  |  |  |  |  |  |  |  |  |  |  |  |  |  |  |  |  |  |  |  |  |  |  |  |  |  |  |  |  |  |  |  |  |  |  |  |  |  |  |  |  |  |  |  |  |  |  |  |  |  |  |  |  |  |  |  |  |  |  |  |  |  | √ |  | √ |  |
| 366 | P-170460 | Helical Gear |  |  |  |  |  |  |  |  |  |  |  |  |  |  |  |  |  |  |  |  |  |  |  |  |  |  |  |  |  |  |  |  |  |  |  |  |  |  |  |  |  |  |  |  |  |  |  |  |  |  |  |  |  |  |  |  |  |  |  |  |  |  |  |  |  |  |  |  |  |  |  | √ |  | √ |  |
| 367 | P-170452 | Spring Clip |  |  |  |  |  |  |  |  |  |  |  |  |  |  |  |  |  |  |  |  |  |  |  |  |  |  |  |  |  |  |  |  |  |  |  |  |  |  |  |  |  |  |  |  |  |  |  |  |  |  |  |  |  |  |  |  |  |  |  |  |  |  |  |  |  |  |  |  |  |  |  | √ |  | √ |  |
| 368 | 3/8"-16 x 3/8 | Bristo Set Screw (cup point) |  |  |  |  |  |  |  |  |  |  |  |  |  |  |  |  |  |  |  |  |  |  |  |  |  |  |  |  |  |  |  |  |  |  |  |  |  |  |  |  |  |  |  |  |  |  |  |  |  |  |  |  |  |  |  |  |  |  |  |  |  |  |  |  |  |  |  |  |  |  |  | √ |  | √ |  |
| 369 | P-170453 | Helical Gear |  |  |  |  |  |  |  |  |  |  |  |  |  |  |  |  |  |  |  |  |  |  |  |  |  |  |  |  |  |  |  |  |  |  |  |  |  |  |  |  |  |  |  |  |  |  |  |  |  |  |  |  |  |  |  |  |  |  |  |  |  |  |  |  |  |  |  |  |  |  |  | √ |  | √ |  |
| 370 | P-170442 | Helical Gear |  |  |  |  |  |  |  |  |  |  |  |  |  |  |  |  |  |  |  |  |  |  |  |  |  |  |  |  |  |  |  |  |  |  |  |  |  |  |  |  |  |  |  |  |  |  |  |  |  |  |  |  |  |  |  |  |  |  |  |  |  |  |  |  |  |  |  |  |  |  |  | √ |  | √ |  |
| 371 | P-170458 | Helical Gear |  |  |  |  |  |  |  |  |  |  |  |  |  |  |  |  |  |  |  |  |  |  |  |  |  |  |  |  |  |  |  |  |  |  |  |  |  |  |  |  |  |  |  |  |  |  |  |  |  |  |  |  |  |  |  |  |  |  |  |  |  |  |  |  |  |  |  |  |  |  |  | √ |  | √ |  |
| 372 | P-170536 | Helical Gear |  |  |  |  |  |  |  |  |  |  |  |  |  |  |  |  |  |  |  |  |  |  |  |  |  |  |  |  |  |  |  |  |  |  |  |  |  |  |  |  |  |  |  |  |  |  |  |  |  |  |  |  |  |  |  |  |  |  |  |  |  |  |  |  |  |  |  |  |  |  |  |  |  | √ |  |
| 373 | P-170537 | Helical Gear |  |  |  |  |  |  |  |  |  |  |  |  |  |  |  |  |  |  |  |  |  |  |  |  |  |  |  |  |  |  |  |  |  |  |  |  |  |  |  |  |  |  |  |  |  |  |  |  |  |  |  |  |  |  |  |  |  |  |  |  |  |  |  |  |  |  |  |  |  |  |  |  |  | √ |  |
| 374 | P-170498 | Helical Gear |  |  |  |  |  |  |  |  |  |  |  |  |  |  |  |  |  |  |  |  |  |  |  |  |  |  |  |  |  |  |  |  |  |  |  |  |  |  |  |  |  |  |  |  |  |  |  |  |  |  |  |  |  |  |  |  |  |  |  |  |  |  |  |  |  |  |  |  |  |  |  |  |  | √ |  |
| 375 | No. 5 | Woodruff Key |  |  |  |  |  |  |  |  |  |  | √ |  |  |  |  |  |  |  |  |  |  |  |  |  |  |  |  |  |  |  |  |  |  |  |  |  |  |  |  |  |  |  |  |  |  |  |  |  |  |  |  |  |  |  |  | √ |  | √ |  | √ |  |  |  |  |  |  |  |  |  |  |  |  | √ |  | √ |  |
| 376 | No. 3 | Woodruff Key |  |  |  |  |  |  |  |  |  |  | √ |  |  |  |  |  |  |  |  |  |  |  |  |  |  |  |  |  |  |  |  |  |  |  |  |  |  |  |  |  |  |  |  |  |  |  |  |  |  |  |  |  |  |  |  | √ |  | √ |  | √ |  |  |  |  |  |  |  |  |  |  |  |  |  |  | √ |  |
| 377 | P-170447 | Screw |  |  |  |  |  |  |  |  |  |  |  |  |  |  |  |  |  |  |  |  |  |  |  |  |  |  |  |  |  |  |  |  |  |  |  |  |  |  |  |  |  |  |  |  |  |  |  |  |  |  |  |  |  |  |  |  |  |  |  |  |  |  |  |  |  |  |  |  |  |  |  |  |  |  | √ |

| ITEM NO. | PIECE PART NUMBER | NAME | DRIVE CODE - BEARING BOX - WORM END (ALSO NON WORM END OF CONVERTED DRIVES) | | | | | | | | | | | | | | | | | | | | | | | | | | | | | | | | | | | | | | | | | | | | | | | | | | | | | | | | | | | | | | | | | | | | | | | | | | |
|---|---|---|---|---|---|---|---|---|---|---|---|---|---|---|---|---|---|---|---|---|---|---|---|---|---|---|---|---|---|---|---|---|---|---|---|---|---|---|---|---|---|---|---|---|---|---|---|---|---|---|---|---|---|---|---|---|---|---|---|---|---|---|---|---|---|---|---|---|---|---|---|---|---|---|---|---|---|---|---|
| | | | 1A | 1C | 1D | 1E | 2A | 3A | 3C | 3D | 3E | 3F | 4A | 4B | 17A | 17B | 17E | 18A | 18B | 18C | 18D | 18G | 18H | 18J | 19A | 19B | 19E | 20A | 20B | 20C | 20D | 20G | 20H | 21A | 21B | 21C | 21D | 21E | 21F | 21G | 21H | 21R | 22A | 22B | 22C | 23A | 23B | 23C | 23D | 23F | 23G | 23H | 23J | 23K | 23L | 23T | 23U | 23W | 24A | 24B | 24C | 24D | 24E | 24F | 25A | 25B | 25E | 26A | 26B | 26C | 26D | 26G | 26H | 35A | 45A | 46A | 47A | 48A | 49A |
| 400 | P-147220 | Roll Guard | | |√| | | | | | | | | | | | | | | | | | | | | | | | | | | | | | | | | | | | | | | | | | | | | | | | | | | | | | | | | | | | | | | | | | | | | | | | | | | | | |
| | P-147221 | Roll Guard |√|√| |√|√|√|√|√|√|√|√|√| | | | | | | | | | | | | | | | | | | | | | | | | | | | | | | | | | | | | | | | | | | | | | | | | | | | | | | | | | | | | | | | |
| | P-170507 | Roll Guard | | | | | | | | | | | | | | | | | | | | | | | | | | | | | | | | | | | | | | | |√|√|√| | | | | | | | | | | | | |√|√|√|√|√|√| | | | | | | | | | | | | | | | |
| | P-170508 | Roll Guard | | | | | | | | | | | | |√|√|√|√|√|√|√|√|√|√|√|√|√|√|√|√|√|√|√|√|√|√|√|√|√|√|√|√|√|√| | | |√|√|√|√|√|√|√|√|√|√|√|√|√| | | | | | |√|√|√|√|√|√|√|√|√|√| | | | | |
| 401 | P-170275 | Screw |√|√|√|√|√|√|√|√|√|√|√|√|√|√|√|√|√|√|√|√|√|√|√|√|√|√|√|√|√|√|√|√|√|√|√|√|√|√|√|√|√|√|√|√|√|√|√|√|√|√|√|√|√|√|√|√|√|√|√|√|√|√|√|√|√|√|√|√|√|√|√|√| | | | | |
| 402 | P-170510 | Washer | | | | | | | | | | | | |√|√|√|√|√|√|√|√|√|√|√|√|√|√|√|√|√|√|√|√|√|√|√|√|√|√|√|√|√|√|√|√|√|√|√|√|√|√|√|√|√|√|√|√|√|√|√|√|√|√|√|√|√|√|√|√|√|√|√|√| | | | | |
| 403 | ES-304670 Detail 1 | Bearing Box Cover | | | | | | | | | | | | |√| | |√|√| | | | | |√| | |√|√| | | | |√|√|√|√| | | | | |√|√| |√|√|√|√|√| | | | | | | | |√|√|√|√|√| | |√| | |√|√| | | | | | | | | | | |
| | ES-304670 Detail 2 | Bearing Box Cover |√|√|√|√|√|√|√|√|√|√|√|√| | | | | | | | | | | | | | | | | | | | | | | | | | | | | | | | | | | | | | | | | | | | | | | | | | | | | | | | | | | | | | | | | | |
| | P-170504 | Cover | | | | | | | | | | | | | | | | | | | | | | | | | | | | | | | | | | | | | | | | | | | | | | | | | | | | | | | | | | | | | | | | | | | | | | | | | |√|√| |
| 404 | P-143360 | Screw |√|√|√|√|√|√|√|√|√|√|√|√|√|√|√|√|√|√|√|√|√|√|√|√|√|√|√|√|√|√|√|√|√|√|√|√|√|√|√|√|√|√|√|√|√|√|√|√|√|√|√|√|√|√|√|√|√|√|√|√|√|√|√|√|√|√|√|√|√|√|√|√|√|√| | |√|
| | P-172262 | Screw | | | | | | | | | | | | | | | | | | | | | | | | | | | | | | | | | | | | | | | | | | | | | | | | | | | | | | | | | | | | | | | | | | | | | | | | | |√|√| |
| 405 | P-154093 | Bearing Box |√|√|√|√| |√|√|√|√|√| | | | | | | | | | | | | | | | | | | | | | | | | | | | | | | | | | | | | | | | | | | | | | | | | | | | | | | | | | | | | | | | | |
| | P-154098 | Bearing Box | | | | |√| | | | | |√|√| | | | | | | | | | | | | | | | | | | | | | | | | | | | | | | | | | | | | | | | | | | | | | | | | | | | | | | | | | | | | | | | |
| | P-154453 | Bearing Box | | | | | | | | | | | | |√| | |√|√| | | | | |√| | |√|√| | | | |√|√|√|√| | | | | | | | |√|√|√|√|√| | | | | | | | |√| | | | | | |√| | |√|√| | | | | | | | | | | |
| | P-154454 | Bearing Box | | | | | | | | | | | | | | | | | | | | | | | | | | | | | | | | | | | | | | |√|√| | | | | | | | | | | | | | | |√|√|√|√| | | | | | | | | | | | | | | | | | | |
| | P-170189 | Bearing Box | | | | | | | | | | | | | |√|√| | |√|√|√|√|√| |√|√| | |√|√|√|√| | | | |√|√|√|√|√| | | | | | | | |√|√|√|√|√|√|√| | | | | | | | | |√|√| | |√|√|√|√|√| | | | | |√|
| | P-170237 | Bearing Box | | | | | | | | | | | | | | | | | | | | | | | | | | | | | | | | | | | | | | | | |√| | | | | | | | | | | | | | | | | | |√|√| | | | | | | | | | | | | | | |
| | P-170465 | Bearing Box | | | | | | | | | | | | | | | | | | | | | | | | | | | | | | | | | | | | | | | | | | | | | | | | | | | | | | | | | | | | | | | | | | | | | | |√|√| | | |
| | P-170502 | Bearing Box | | | | | | | | | | | | | | | | | | | | | | | | | | | | | | | | | | | | | | | | | | | | | | | | | | | | | | | | | | | | | | | | | | | | | | | | |√|√| |
| 406 | P-154095 | Gasket |√|√|√|√|√|√|√|√|√|√|√|√| | | | | | | | | | | | | | | | | | | | | | | | | | | | | | | | | | | | | | | | | | | | | | | | | | | | | | | | | | | | | | | |
| | P-154519 | Gasket | | | | | | | | | | | | |√| | |√|√| | | | | |√| | |√|√| | | | |√|√|√|√| | | | | |√|√| |√|√|√|√|√| | | | | | | | |√|√|√|√|√| | |√| | |√|√| | | | | | | | | | | |
| 407 | P-154096 | Bearing Box Cover |√|√|√|√| |√|√|√|√|√| | |√| | |√|√| | | | | |√| | |√|√| | | | |√|√|√|√| | | | | | | | |√|√|√|√|√| | | | | | | | |√| | | | | | |√| | |√|√| | | | | | | | | | | |
| | P-154099 | Bearing Box Cover | | | | |√| | | | | |√|√| | | | | | | | | | | | | | | | | | | | | | | | | | | | |√|√| | | | | | | | | | | | | | | |√|√|√|√| | | | | | | | | | | | | | | | | | | |
| | P-170505 | Bearing Box Cover | | | | | | | | | | | | | | | | | | | | | | | | | | | | | | | | | | | | | | | | | | | | | | | | | | | | | | | | | | | | | | | | | | | | | | | | |√|√| |
| 408 | P-143360 | Screw |√|√|√|√|√|√|√|√|√|√|√|√|√| | |√|√| | | | | |√| | |√|√| | | | |√|√|√|√| | | | | |√|√| |√|√|√|√|√| | | | | | | | |√|√|√|√|√| | |√| | |√|√| | | | | | | | |√|√| |
| 409 | P-154097 | Gasket |√|√|√|√| |√|√|√|√|√| | |√| | |√|√| | | | | |√| | |√|√| | | | |√|√|√|√| | | | | | | | |√|√|√|√|√| | | | | | | | |√| | | | | | |√| | |√|√| | | | | | | | | | | |
| | P-154100 | Gasket | | | | |√| | | | | |√|√| | | | | | | | | | | | | | | | | | | | | | | | | | | | |√|√| | | | | | | | | | | | | | | |√|√|√|√| | | | | | | | | | | | | | | | | | | |
| 410 | P-170597 | Bearing Box Cover | | | | | | | | | | | | | |√|√| | |√|√|√|√|√| |√|√| | |√|√|√|√| | | | |√|√|√|√|√| | | | | | | | |√|√|√|√|√|√|√| | | | | | | | | |√|√| | |√|√|√|√|√| | | | | |√|
| | P-170598 | Bearing Box Cover | | | | | | | | | | | | | | | | | | | | | | | | | | | | | | | | | | | | | | | | |√| | | | | | | | | | | | | | | | | | |√|√| | | | | | | | | | | | | | | |
| 411 | P-170275 | Screw | | | | | | | | | | | | | |√|√| | |√|√|√|√|√| |√|√| | |√|√|√|√| | | | |√|√|√|√|√| | |√| | | | | |√|√|√|√|√|√|√| | | | | |√|√| |√|√| | |√|√|√|√|√| | | | | |√|
| 412 | P-170191 | Spur Gear (steel) | | | | | | | | | | | | | |√|√| | |√|√|√|√|√| |√|√| | |√|√|√|√| | | | |√|√|√|√|√| | | | | | | | |√|√|√|√|√|√|√| | | | | | | | | |√|√| | |√|√|√|√|√| | | | | |√|
| | P-170610 | Spur Gear (steel) | | | | | | | | | | | | | | | | | | | | | | | | | | | | | | | | | | | | | | | | |√| | | | | | | | | | | | | | | | | | |√|√| | | | | | | | | | | | | | | |
| | P-170611 | Spur Gear (steel) | | | | | | | | | | | | | | | | | | | | | | | | | | | | | | | | | | | | | | | | | | | | | | | | | | | | | | | | | | | | | | | | | | | | | | |√|√|√|√| |
| 413 | P-170249 | Screw | | | | | | | | | | | | | | | | | | | | | | | | | | | | | | | | | | | | | | | | |√| | | | | | | | | | | | | | | | | | |√|√| | | | | | | | | | |√|√|√|√| |
| | P-170599 | Nut | | | | | | | | | | | | | |√|√| | |√|√|√|√|√| |√|√| | |√|√|√|√| | | | |√|√|√|√|√| | | | | | | | |√|√|√|√|√|√|√| | | | | | | | | |√|√| | |√|√|√|√|√| | | | | |√|
| 414 | P-170472 | Spur Gear (steel) | | | | | | | | | | | | | | | | | | | | | | | | | | | | | | | | | | | | | | | | | | | | | | | | | | | | | | | | | | | | | | | | | | | | | | |√|√|√|√| |
| | P-170609 | Spur Gear (steel) | | | | | | | | | | | | | |√|√| | |√|√|√|√|√| |√|√| | |√|√|√|√| | | | |√|√|√|√|√| | | | | | | | |√|√|√|√|√|√|√| | | | | | | | | |√|√| | |√|√|√|√|√| | | | | |√|
| | P-170613 | Spur Gear (steel) | | | | | | | | | | | | | | | | | | | | | | | | | | | | | | | | | | | | | | | | |√| | | | | | | | | | | | | | | | | | |√|√| | | | | | | | | | | | | | | |
| 415 | P-170193 | Spur Gear (steel) | | | | | | | | | | | | | |√|√| | |√|√|√|√|√| |√|√| | |√|√|√|√| | | | |√|√|√|√|√| | | | | | | | |√|√|√|√|√|√|√| | | | | | | | | |√|√| | |√|√|√|√|√| | | | | |√|
| | P-170247 | Spur Gear (steel) | | | | | | | | | | | | | | | | | | | | | | | | | | | | | | | | | | | | | | | | |√| | | | | | | | | | | | | | | | | | |√|√| | | | | | | | | | | | | | | |
| | P-170473 | Spur Gear (steel) | | | | | | | | | | | | | | | | | | | | | | | | | | | | | | | | | | | | | | | | | | | | | | | | | | | | | | | | | | | | | | | | | | | | | | |√|√|√|√| |
| 416 | P-143360 | Screw | | | | | | | | | | | | | |√|√| | |√|√|√|√|√| |√|√| | |√|√|√|√| | | | |√|√|√|√|√| | | | | | | | |√|√|√|√|√|√|√| | | | | | | | | |√|√| | |√|√|√|√|√|√|√|√|√|√|√|
| | P-170250 | Screw | | | | | | | | | | | | | | | | | | | | | | | | | | | | | | | | | | | | | | | | |√| | | | | | | | | | | | | | | | | | |√|√| | | | | | | | | | | | | | | |

DRIVE CODE - BEARING BOX - WORM END (ALSO NON WORM END OF CONVERTED DRIVES)

| ITEM NO. | PIECE PART NUMBER | NAME | 1A | 1C | 1D | 1E | 2A | 3A | 3C | 3D | 3E | 3F | 4A | 4B | 17A | 17B | 17E | 18A | 18B | 18C | 18D | 18G | 18H | 18J | 19A | 19B | 19E | 20A | 20B | 20C | 20D | 20G | 20H | 21A | 21B | 21C | 21D | 21E | 21F | 21G | 21H | 21R |
|---|---|---|---|---|---|---|---|---|---|---|---|---|---|---|---|---|---|---|---|---|---|---|---|---|---|---|---|---|---|---|---|---|---|---|---|---|---|---|---|---|---|---|
| 417 | P-170194 | Bushing |  |  |  |  |  |  |  |  |  |  |  |  |  | √ | √ |  |  | √ | √ | √ | √ | √ |  | √ | √ |  |  | √ | √ | √ | √ |  |  |  |  | √ | √ | √ | √ | √ |
|  | P-170248 | Stud |  |  |  |  |  |  |  |  |  |  |  |  |  |  |  |  |  |  |  |  |  |  |  |  |  |  |  |  |  |  |  |  |  |  |  |  |  |  |  |  |
|  | P-170474 | Bushing |  |  |  |  |  |  |  |  |  |  |  |  |  |  |  |  |  |  |  |  |  |  |  |  |  |  |  |  |  |  |  |  |  |  |  |  |  |  |  |  |
| 418 | P-173238 | Gasket |  |  |  |  |  |  |  |  |  |  |  |  |  | √ | √ |  |  | √ | √ | √ | √ | √ |  | √ | √ |  |  | √ | √ | √ | √ |  |  |  |  | √ | √ | √ | √ | √ |
| 419 | P-170478 | Pipe Plug | √ | √ | √ | √ |  | √ | √ | √ | √ | √ |  |  | √ | √ | √ | √ | √ | √ | √ | √ | √ | √ | √ | √ | √ | √ | √ | √ | √ | √ | √ | √ | √ | √ | √ | √ | √ | √ | √ | √ |
| 420 | P-290149 | Plug | √ | √ | √ | √ |  | √ | √ | √ | √ | √ |  |  | √ | √ | √ | √ | √ | √ | √ | √ | √ | √ | √ | √ | √ | √ | √ | √ | √ | √ | √ | √ | √ | √ | √ | √ | √ | √ | √ | √ |
| 421 | P-125436 | Plug | √ | √ | √ | √ |  | √ | √ | √ | √ | √ |  |  | √ | √ | √ | √ | √ | √ | √ | √ | √ | √ | √ | √ | √ | √ | √ | √ | √ | √ | √ | √ | √ | √ | √ | √ | √ | √ | √ | √ |
| 422 | P-170534 | Plug |  |  |  |  |  |  |  |  |  |  |  |  |  | √ | √ |  |  | √ | √ | √ | √ | √ |  | √ | √ |  |  | √ | √ | √ | √ |  |  |  |  | √ | √ | √ | √ | √ |
| 423 | P-170582 | Washer |  |  |  |  |  |  |  |  |  |  |  |  |  | √ | √ |  |  | √ | √ | √ | √ | √ |  | √ | √ |  |  | √ | √ | √ | √ |  |  |  |  | √ | √ | √ | √ | √ |
| 424 | P-173657 | Plug |  |  |  |  |  |  |  |  |  |  |  |  |  | √ | √ |  |  | √ | √ | √ | √ | √ |  | √ | √ |  |  | √ | √ | √ | √ |  |  |  |  | √ | √ | √ | √ | √ |
| 425 | P-170582 | Washer |  |  |  |  |  |  |  |  |  |  |  |  |  | √ | √ |  |  | √ | √ | √ | √ | √ |  | √ | √ |  |  | √ | √ | √ | √ |  |  |  |  | √ | √ | √ | √ | √ |
| 426 | P-173778 | Plug |  |  |  |  |  |  |  |  |  |  |  |  |  |  |  |  |  |  |  |  |  |  |  |  |  |  |  |  |  |  |  |  |  |  |  |  |  |  |  |  |
| 427 | P-170581 | Washer |  |  |  |  |  |  |  |  |  |  |  |  |  |  |  |  |  |  |  |  |  |  |  |  |  |  |  |  |  |  |  |  |  |  |  |  |  |  |  |  |
| 428 | P-170553 | Guard |  |  |  |  |  |  |  |  |  |  |  |  |  |  |  |  |  |  |  |  |  |  |  |  |  |  |  |  |  |  |  |  |  |  |  |  |  |  |  |  |
| 429 | P-170469 | Cover |  |  |  |  |  |  |  |  |  |  |  |  |  |  |  |  |  |  |  |  |  |  |  |  |  |  |  |  |  |  |  |  |  |  |  |  |  |  |  |  |
| 430 | P-170063 | Screw |  |  |  |  |  |  |  |  |  |  |  |  |  |  |  |  |  |  |  |  |  |  |  |  |  |  |  |  |  |  |  |  |  |  |  |  |  |  |  |  |
| 431 | P-170468 | Pad |  |  |  |  |  |  |  |  |  |  |  |  |  |  |  |  |  |  |  |  |  |  |  |  |  |  |  |  |  |  |  |  |  |  |  |  |  |  |  |  |
| 432 | P-170466 | Bearing Box Cover |  |  |  |  |  |  |  |  |  |  |  |  |  |  |  |  |  |  |  |  |  |  |  |  |  |  |  |  |  |  |  |  |  |  |  |  |  |  |  |  |
| 433 | P-172262 | Screw |  |  |  |  |  |  |  |  |  |  |  |  |  |  |  |  |  |  |  |  |  |  |  |  |  |  |  |  |  |  |  |  |  |  |  |  |  |  |  |  |
| 434 | P-170530 | Bearing Box Cover |  |  |  |  |  |  |  |  |  |  |  |  |  |  |  |  |  |  | √ |  |  | √ |  |  |  |  |  |  | √ |  | √ |  |  |  |  |  |  |  |  |  |
|  | P-170532 | Bearing Box Cover |  |  |  |  |  |  |  |  |  |  |  |  |  |  |  |  |  |  |  |  |  |  |  |  |  |  |  |  |  |  |  |  |  |  |  |  |  |  |  |  |
| 435 | P-170195 | Shaft Extension |  |  |  |  |  |  |  |  |  |  |  |  |  |  |  |  |  |  | √ |  |  | √ |  |  |  |  |  |  | √ |  | √ |  |  |  |  |  |  |  |  |  |
| 436 | P-147220 | Roll Guard |  |  |  |  |  |  |  | √ | √ |  |  | √ |  |  |  |  |  |  |  |  |  |  |  |  |  |  |  |  |  |  |  |  |  |  |  |  |  |  |  |  |
|  | P-154448 | Roll Guard |  |  |  |  |  |  |  |  |  |  |  |  |  |  |  |  | √ |  | √ |  |  | √ |  |  |  |  | √ |  | √ |  | √ |  |  |  |  |  |  |  |  |  |
| 437 | P-170275 | Screw |  |  |  |  |  |  |  | √ | √ |  |  | √ |  |  |  |  | √ |  | √ |  |  | √ |  |  |  |  | √ |  | √ |  | √ |  |  |  |  |  |  |  |  |  |
| 438 | P-170528 | Roll Guard |  |  |  |  |  |  |  |  |  |  |  |  |  | √ | √ |  |  | √ | √ | √ | √ | √ |  | √ | √ |  |  | √ | √ | √ | √ |  |  |  |  | √ | √ | √ | √ | √ |

| ITEM NO. | PIECE PART NUMBER | NAME | 22A | 22B | 22C | 23A | 23B | 23C | 23D | 23F | 23G | 23H | 23J | 23K | 23L | 23T | 23U | 23W | 24A | 24B | 24C | 24D | 24E | 24F | 25A | 25B | 25E | 26A | 26B | 26C | 26D | 26G | 26H | 35A | 45A | 46A | 47A | 48A | 49A |
|---|---|---|---|---|---|---|---|---|---|---|---|---|---|---|---|---|---|---|---|---|---|---|---|---|---|---|---|---|---|---|---|---|---|---|---|---|---|---|---|
| 417 | P-170194 | Bushing |  |  |  |  |  |  |  |  | √ | √ | √ | √ | √ | √ | √ |  |  |  |  |  |  |  |  | √ | √ |  |  | √ | √ | √ | √ | √ |  |  |  |  | √ |
|  | P-170248 | Stud |  |  | √ |  |  |  |  |  |  |  |  |  |  |  |  |  |  |  |  |  | √ | √ |  |  |  |  |  |  |  |  |  |  |  |  |  |  |  |
|  | P-170474 | Bushing |  |  |  |  |  |  |  |  |  |  |  |  |  |  |  |  |  |  |  |  |  |  |  |  |  |  |  |  |  |  |  |  | √ | √ | √ | √ |  |
| 418 | P-173238 | Gasket |  |  | √ |  |  |  |  |  | √ | √ | √ | √ | √ | √ | √ |  |  |  |  |  | √ | √ |  | √ | √ |  |  | √ | √ | √ | √ | √ |  |  |  |  | √ |
| 419 | P-170478 | Pipe Plug |  |  | √ | √ | √ | √ | √ | √ | √ | √ | √ | √ | √ | √ | √ |  |  |  |  |  | √ | √ | √ | √ | √ | √ | √ | √ | √ | √ | √ | √ |  |  |  |  |  |
| 420 | P-290149 | Plug |  |  | √ | √ | √ | √ | √ | √ | √ | √ | √ | √ | √ | √ | √ |  |  |  |  |  | √ | √ | √ | √ | √ | √ | √ | √ | √ | √ | √ | √ |  |  |  |  |  |
| 421 | P-125436 | Plug |  |  | √ | √ | √ | √ | √ | √ | √ | √ | √ | √ | √ | √ | √ |  |  |  |  |  | √ | √ | √ | √ | √ | √ | √ | √ | √ | √ | √ | √ |  |  |  |  |  |
| 422 | P-170534 | Plug |  |  | √ |  |  |  |  |  | √ | √ | √ | √ | √ | √ | √ |  |  |  |  |  | √ | √ |  | √ | √ |  |  | √ | √ | √ | √ | √ |  |  |  |  | √ |
| 423 | P-170582 | Washer |  |  | √ |  |  |  |  |  | √ | √ | √ | √ | √ | √ | √ |  |  |  |  |  | √ | √ |  | √ | √ |  |  | √ | √ | √ | √ | √ |  |  |  |  | √ |
| 424 | P-173657 | Plug |  |  | √ |  |  |  |  |  | √ | √ | √ | √ | √ | √ | √ |  |  |  |  |  | √ | √ |  | √ | √ |  |  | √ | √ | √ | √ | √ |  |  |  |  | √ |
| 425 | P-170582 | Washer |  |  | √ |  |  |  |  |  | √ | √ | √ | √ | √ | √ | √ |  |  |  |  |  | √ | √ |  | √ | √ |  |  | √ | √ | √ | √ | √ |  |  |  |  | √ |
| 426 | P-173778 | Plug |  |  |  |  |  |  |  |  |  |  |  |  |  |  |  |  |  |  |  |  |  |  |  |  |  |  |  |  |  |  |  |  | √ | √ | √ | √ |  |
| 427 | P-170581 | Washer |  |  |  |  |  |  |  |  |  |  |  |  |  |  |  |  |  |  |  |  |  |  |  |  |  |  |  |  |  |  |  |  | √ | √ | √ | √ |  |
| 428 | P-170553 | Guard |  |  |  |  |  |  |  |  |  |  |  |  |  |  |  |  |  |  |  |  |  |  |  |  |  |  |  |  |  |  |  |  | √ | √ | √ | √ |  |
| 429 | P-170469 | Cover |  |  |  |  |  |  |  |  |  |  |  |  |  |  |  |  |  |  |  |  |  |  |  |  |  |  |  |  |  |  |  |  | √ | √ |  |  |  |
| 430 | P-170063 | Screw |  |  |  |  |  |  |  |  |  |  |  |  |  |  |  |  |  |  |  |  |  |  |  |  |  |  |  |  |  |  |  |  | √ | √ |  |  |  |
| 431 | P-170468 | Pad |  |  |  |  |  |  |  |  |  |  |  |  |  |  |  |  |  |  |  |  |  |  |  |  |  |  |  |  |  |  |  |  |  |  | √ | √ |  |
| 432 | P-170466 | Bearing Box Cover |  |  |  |  |  |  |  |  |  |  |  |  |  |  |  |  |  |  |  |  |  |  |  |  |  |  |  |  |  |  |  |  | √ | √ |  |  |  |
| 433 | P-172262 | Screw |  |  |  |  |  |  |  |  |  |  |  |  |  |  |  |  |  |  |  |  |  |  |  |  |  |  |  |  |  |  |  |  |  |  | √ | √ |  |
| 434 | P-170530 | Bearing Box Cover |  |  |  |  |  |  |  |  |  | √ |  | √ |  |  | √ |  |  |  |  |  |  |  |  |  |  |  |  |  | √ |  | √ |  |  |  |  |  |  |
|  | P-170532 | Bearing Box Cover |  |  |  |  |  |  |  |  |  |  |  |  |  |  |  |  |  |  |  |  |  | √ |  |  |  |  |  |  |  |  |  |  |  |  |  |  |  |
| 435 | P-170195 | Shaft Extension |  |  |  |  |  |  |  |  |  | √ |  | √ |  |  | √ |  |  |  |  |  |  | √ |  |  |  |  |  |  | √ |  | √ |  |  |  |  |  |  |
| 436 | P-147220 | Roll Guard |  |  |  |  |  |  |  |  |  |  |  |  |  |  |  |  |  |  |  |  |  |  |  |  |  |  |  |  |  |  |  |  |  |  |  |  |  |
|  | P-154448 | Roll Guard |  |  |  |  | √ |  | √ |  |  | √ |  | √ |  |  | √ | √ |  | √ |  | √ |  | √ |  |  |  |  | √ |  | √ |  | √ |  |  |  |  |  |  |
| 437 | P-170275 | Screw |  |  |  |  | √ |  | √ |  |  | √ |  | √ |  |  | √ | √ |  | √ |  | √ |  | √ |  |  |  |  | √ |  | √ |  | √ |  |  |  |  |  |  |
| 438 | P-170528 | Roll Guard |  |  |  |  |  |  |  | √ | √ | √ | √ | √ | √ | √ | √ |  |  |  |  |  |  |  |  | √ | √ |  |  | √ | √ | √ | √ | √ |  |  |  |  |  |

| ITEM NO. | PIECE PART NUMBER | NAME | DRIVE CODE - BEARING BOX - NON WORM END | | | | | | | | | | | | | | | | | | | | | | | | | | | | | | | | | | | | | | | | | | | | | | | | | | | | | | | | | | | | | | | | | | | | | | | | | | | |
|---|---|---|---|---|---|---|---|---|---|---|---|---|---|---|---|---|---|---|---|---|---|---|---|---|---|---|---|---|---|---|---|---|---|---|---|---|---|---|---|---|---|---|---|---|---|---|---|---|---|---|---|---|---|---|---|---|---|---|---|---|---|---|---|---|---|---|---|---|---|---|---|---|---|---|---|---|---|---|---|
| | | | 1A | 1C | 1D | 1E | 2A | 3A | 3C | 3D | 3E | 3F | 4A | 4B | 17A | 17B | 17E | 18A | 18B | 18C | 18D | 18G | 18H | 18J | 19A | 19B | 19E | 20A | 20B | 20C | 20D | 20G | 20H | 21A | 21B | 21C | 21D | 21E | 21F | 21G | 21H | 21R | 22A | 22B | 22C | 23A | 23B | 23C | 23D | 23F | 23G | 23H | 23J | 23K | 23L | 23T | 23U | 23W | 24A | 24B | 24C | 24D | 24E | 24F | 25A | 25B | 25E | 26A | 26B | 26C | 26D | 26G | 26H | 35A | 45A | 46A | 47A | 48A | 49A |
| 500 | P-147220 | Roll Guard | | | | | | √ | √ | | | √ | √ | | | | | | | | | | | | | | | | | | | | | | | | | | | | | | | | | | | | | | | | | | | | | | | | | | | | | | | | | | | | | | | | | | |
| | P-154448 | Roll Guard | | | | | | | | | | | | | | | | √ | | √ | | √ | √ | | | | | √ | | √ | | √ | | | | | | | | | | | | | | √ | | √ | | √ | √ | √ | | | √ | √ | | | √ | | √ | | √ | | | | | √ | | √ | | √ | | | | | | | √ |
| 501 | P-170275 | Screw | | | | | | √ | √ | | | √ | √ | | | | | √ | | √ | | √ | √ | | | | | √ | | √ | | √ | | | | | | | | | | | | | | √ | | √ | | √ | √ | √ | | | √ | √ | | | √ | | √ | | √ | | | | | √ | | √ | | √ | | | | | | | √ |
| 502 | ES-304670 Detail 1 | Bearing Box Cover | | | | | | | | | | | | | | | | √ | | | | | | | | | | √ | | | | | | | | | | | | | | | | | | √ | | √ | | √ | | | | | | | | | √ | | √ | | | | | | | √ | | | | | | | | | | | |
| | ES-304670 Detail 2 | Bearing Box Cover | | | | | | √ | √ | | | √ | √ | | | | | | | | | | | | | | | | | | | | | | | | | | | | | | | | | | | | | | | | | | | | | | | | | | | | | | | | | | | | | | | | | |
| | P-170504 | Bearing Box Cover | | | | | | | | | | | | | | | | | | | | | | | | | | | | | | | | | | | | | | | | | | | | | | | | | | | | | | | | | | | | | | | | | | | | | | | | | | | √ | |
| | P-170530 | Bearing Box Cover | | | | | | | | | | | | | | | | | | √ | | √ | √ | | | | | | | √ | | √ | | | | | | | | | | | | | | | | | | | √ | √ | | | √ | √ | | | | | | | | | | | | | | √ | | √ | | | | | | | √ |
| | P-170532 | Bearing Box Cover | | | | | | | | | | | | | | | | | | | | | | | | | | | | | | | | | | | | | | | | | | | | | | | | | | | | | | | | | | | | | √ | | | | | | | | | | | | | | | | |
| | P-170466 | Bearing Box Cover | | | | | | | | | | | | | | | | | | | | | | | | | | | | | | | | | | | | | | | | | | | | | | | | | | | | | | | | | | | | | | | | | | | | | | | | | √ | | | |
| 503 | P-143360 | Screw | | | | | | √ | √ | | | √ | √ | | | | | √ | | √ | | √ | √ | | | | | √ | | √ | | √ | | | | | | | | | | | | | | √ | | √ | | √ | √ | √ | | | √ | √ | | | √ | | √ | | √ | | | | | √ | | √ | | √ | | | | | | | √ |
| | P-172262 | Screw | | | | | | | | | | | | | | | | | | | | | | | | | | | | | | | | | | | | | | | | | | | | | | | | | | | | | | | | | | | | | | | | | | | | | | | | | √ | | √ | |
| 504 | P-154093 | Bearing Box | | | | | | √ | √ | | | √ | | | | | | | | | | | | | | | | | | | | | | | | | | | | | | | | | | | | | | | | | | | | | | | | | | | | | | | | | | | | | | | | | | |
| | P-154908 | Bearing Box | | | | | | | | | | | √ | | | | | | | | | | | | | | | | | | | | | | | | | | | | | | | | | | | | | | | | | | | | | | | | | | | | | | | | | | | | | | | | | |
| | P-154453 | Bearing Box | | | | | | | | | | | | | | | | √ | | | | | | | | | | √ | | | | | | | | | | | | | | | | | | √ | | √ | | √ | | | | | | | | | | | | | | | | | | √ | | | | | | | | | | | |
| | P-170189 | Bearing Box | | | | | | | | | | | | | | | | | | √ | | √ | √ | | | | | | | √ | | √ | | | | | | | | | | | | | | | | | | | √ | √ | | | √ | √ | | | | | | | | | | | | | | √ | | √ | | | | | | | √ |
| | P-170237 | Bearing Box | | | | | | | | | | | | | | | | | | | | | | | | | | | | | | | | | | | | | | | | | | | | | | | | | | | | | | | | | | | | | √ | | | | | | | | | | | | | | | | |
| | P-170465 | Bearing Box | | | | | | | | | | | | | | | | | | | | | | | | | | | | | | | | | | | | | | | | | | | | | | | | | | | | | | | | | | | | | | | | | | | | | | | | | √ | | | |
| | P-170502 | Bearing Box | | | | | | | | | | | | | | | | | | | | | | | | | | | | | | | | | | | | | | | | | | | | | | | | | | | | | | | | | | | | | | | | | | | | | | | | | | | √ | |
| | P-154454 | Bearing Box | | | | | | | | | | | | | | | | | | | | | | | | | | | | | | | | | | | | | | | | | | | | | | | | | | | | | | | | | √ | | √ | | | | | | | | | | | | | | | | | | | |
| 505 | P-143360 | Screw | | | | | | √ | √ | | | √ | √ | | | | | √ | | | | | | | | | | √ | | | | | | | | | | | | | | | | | | √ | | √ | | √ | | | | | | | | | √ | | √ | | | | | | | √ | | | | | | | | | | | |
| 506 | P-154096 | Bearing Box Cover | | | | | | √ | √ | | | √ | | | | | | √ | | | | | | | | | | √ | | | | | | | | | | | | | | | | | | √ | | √ | | √ | | | | | | | | | | | | | | | | | | √ | | | | | | | | | | | |
| | P-154099 | Bearing Box Cover | | | | | | | | | | | √ | | | | | | | | | | | | | | | | | | | | | | | | | | | | | | | | | | | | | | | | | | | | | √ | | √ | | | | | | | | | | | | | | | | | | | |
| | P-170505 | Bearing Box Cover | | | | | | | | | | | | | | | | | | | | | | | | | | | | | | | | | | | | | | | | | | | | | | | | | | | | | | | | | | | | | | | | | | | | | | | | | | √ | |
| 507 | P-154097 | Gasket | | | | | | √ | √ | | | √ | | | | | | √ | | | | | | | | | | √ | | | | | | | | | | | | | | | | | | √ | | √ | | √ | | | | | | | | | | | | | | | | | | √ | | | | | | | | | | | |
| | P-154100 | Gasket | | | | | | | | | | | √ | | | | | | | | | | | | | | | | | | | | | | | | | | | | | | | | | | | | | | | | | | | | | √ | | √ | | | | | | | | | | | | | | | | | | | |
| 508 | P-154519 | Gasket | | | | | | | | | | | | | | | | √ | | | | | | | | | | √ | | | | | | | | | | | | | | | | | | √ | | √ | | √ | | | | | | | | | √ | | √ | | | | | | | √ | | | | | | | | | | | |
| | P-154095 | Gasket | | | | | | √ | √ | | | √ | √ | | | | | | | | | | | | | | | | | | | | | | | | | | | | | | | | | | | | | | | | | | | | | | | | | | | | | | | | | | | | | | | | | |
| 509 | P-143360 | Screw | | | | | | | | | | | | | | | | | | √ | | √ | √ | | | | | | | √ | | √ | | | | | | | | | | | | | | | | | | | √ | | √ | | √ | √ | | | | | | | | | | | | | | √ | | √ | | | | | | | √ |
| 510 | P-170191 | Spur Gear (steel) | | | | | | | | | | | | | | | | | | √ | | √ | √ | | | | | | | √ | | √ | | | | | | | | | | | | | | | | | | | √ | | √ | | √ | √ | | | | | | | | √ | | | | | | | | | | | | | | | √ |
| | P-170610 | Spur Gear (steel) | | | | | | | | | | | | | | | | | | | | | | | | | | | | | | | | | | | | | | | | | | | | | | | | | | | | | | | | | | | | | √ | | | | | | | | | | | | | | | | |
| | P-170611 | Spur Gear (steel) | | | | | | | | | | | | | | | | | | | | | | | | | | | | | | | | | | | | | | | | | | | | | | | | | | | | | | | | | | | | | | | | | | | | | | | | | √ | | √ | |
| 511 | P-170195 | Shaft Extension | | | | | | | | | | | | | | | | | | √ | | √ | √ | | | | | | | √ | | √ | | | | | | | | | | | | | | | | | | | √ | | √ | | √ | √ | | | | | | | | | | | | | | √ | | √ | | | | | | | √ |
| | P-170249 | Screw | | | | | | | | | | | | | | | | | | | | | | | | | | | | | | | | | | | | | | | | | | | | | | | | | | | | | | | | | | | | | √ | | | | | | | | | | | | | √ | | √ | |
| | P-170251 | Shaft Extension | | | | | | | | | | | | | | | | | | | | | | | | | | | | | | | | | | | | | | | | | | √ | | | | | | | | | | | | | | | | | | | √ | | | | | | | | | | | | | | | | |
| 512 | P-170472 | Spur Gear (steel) | | | | | | | | | | | | | | | | | | | | | | | | | | | | | | | | | | | | | | | | | | | | | | | | | | | | | | | | | | | | | | | | | | | | | | | | | √ | | √ | |
| | P-170609 | Spur Gear (steel) | | | | | | | | | | | | | | | | | | √ | | √ | √ | | | | | | | √ | | √ | | | | | | | | | | | | | | | | | | | √ | | √ | | √ | √ | | | | | | | | | | | | | | √ | | √ | | | | | | | √ |
| | P-170613 | Spur Gear (steel) | | | | | | | | | | | | | | | | | | | | | | | | | | | | | | | | | | | | | | | | | | | | | | | | | | | | | | | | | | | | | √ | | | | | | | | | | | | | | | | |
| 513 | P-170193 | Spur Gear (steel) | | | | | | | | | | | | | | | | | | √ | | √ | √ | | | | | | | √ | | √ | | | | | | | | | | | | | | | | | | | √ | | √ | | √ | √ | | | | | | | | | | | | | | √ | | √ | | | | | | | √ |
| | P-170247 | Spur Gear (steel) | | | | | | | | | | | | | | | | | | | | | | | | | | | | | | | | | | | | | | | | | | | | | | | | | | | | | | | | | | | | | √ | | | | | | | | | | | | | | | | |
| | P-170473 | Spur Gear (steel) | | | | | | | | | | | | | | | | | | | | | | | | | | | | | | | | | | | | | | | | | | | | | | | | | | | | | | | | | | | | | | | | | | | | | | | | | √ | | √ | |
| 514 | P-170194 | Bushing | | | | | | | | | | | | | | | | | | √ | | √ | √ | | | | | | | √ | | √ | | | | | | | | | | | | | | | | | | | √ | | √ | | √ | √ | | | | | | | | | | | | | | √ | | √ | | | | | | | √ |
| | P-170248 | Stud | | | | | | | | | | | | | | | | | | | | | | | | | | | | | | | | | | | | | | | | | | | | | | | | | | | | | | | | | | | | | √ | | | | | | | | | | | | | | | | |
| | P-170474 | Bushing | | | | | | | | | | | | | | | | | | | | | | | | | | | | | | | | | | | | | | | | | | | | | | | | | | | | | | | | | | | | | | | | | | | | | | | | | √ | | √ | |

ISS 4, SECTION 159-720-801

| ITEM NO. | PIECE PART NUMBER | NAME | DRIVE CODE - BEARING BOX - NON WORM END | | | | | | | | | | | | | | | | | | | | | | | | | | | | | | | | | | |
|---|---|---|---|---|---|---|---|---|---|---|---|---|---|---|---|---|---|---|---|---|---|---|---|---|---|---|---|---|---|---|---|---|---|---|---|---|---|
| | | | 1A | 1C | 1D | 1E | 2A | 3A | 3C | 3D | 3E | 3F | 4A | 4B | 17A | 17B | 17E | 18A | 18B | 18C | 18D | 18G | 18H | 18J | 19A | 19B | 19E | 20A | 20B | 20C | 20D | 20G | 20H | 21A | 21B | 21C | 21D |
| 515 | P-143360 | Screw | | | | | | | | | | | | | | | | | | √ | | √ | √ | | | | | | | √ | | √ | | | | | |
| | P-170250 | Screw | | | | | | | | | | | | | | | | | | | | | | | | | | | | | | | | | | | |
| 516 | P-170478 | Pipe Plug | | | | | | √ | √ | | | √ | | | | | | √ | √ | √ | | √ | √ | | | | | √ | √ | √ | | √ | | | | | |
| 517 | P-290149 | Plug | | | | | | √ | √ | | | √ | | | | | | √ | √ | √ | | √ | √ | | | | | √ | √ | √ | | √ | | | | | |
| 518 | P-125436 | Plug | | | | | | √ | √ | | | √ | | | | | | √ | √ | √ | | √ | √ | | | | | √ | √ | √ | | √ | | | | | |
| 519 | P-170534 | Plug | | | | | | | | | | | | | | | | | | √ | | √ | √ | | | | | | | √ | | √ | | | | | |
| 520 | P-170582 | Washer | | | | | | | | | | | | | | | | | | √ | | √ | √ | | | | | | | √ | | √ | | | | | |
| 521 | P-173657 | Plug | | | | | | | | | | | | | | | | | | √ | | √ | √ | | | | | | | √ | | √ | | | | | |
| 522 | P-170582 | Washer | | | | | | | | | | | | | | | | | | √ | | √ | √ | | | | | | | √ | | √ | | | | | |
| 523 | P-173778 | Plug | | | | | | | | | | | | | | | | | | | | | | | | | | | | | | | | | | | |
| 524 | P-170581 | Washer | | | | | | | | | | | | | | | | | | | | | | | | | | | | | | | | | | | |
| 525 | P-170467 | Guard | | | | | | | | | | | | | | | | | | | | | | | | | | | | | | | | | | | |
| 526 | P-143360 | Screw | | | | | | | | | | | | | | | | | | | | | | | | | | | | | | | | | | | |
| 527 | P-170468 | Pad | | | | | | | | | | | | | | | | | | | | | | | | | | | | | | | | | | | |
| 528 | P-172262 | Screw | | | | | | | | | | | | | | | | | | | | | | | | | | | | | | | | | | | |

| ITEM NO. | PIECE PART NUMBER | NAME | 21E | 21F | 21G | 21H | 21R | 22A | 22B | 22C | 23A | 23B | 23C | 23D | 23F | 23G | 23H | 23J | 23K | 23L | 23T | 23U | 23W | 24A | 24B | 24C | 24D | 24E | 24F | 25A | 25B | 25E | 26A | 26B | 26C | 26D | 26G | 26H | 35A | 45A | 46A | 47A | 48A | 49A |
|---|---|---|---|---|---|---|---|---|---|---|---|---|---|---|---|---|---|---|---|---|---|---|---|---|---|---|---|---|---|---|---|---|---|---|---|---|---|---|---|---|---|---|---|---|
| 515 | P-143360 | Screw | | | | | | | | | | | | | | √ | | √ | | √ | √ | | | | | | | | | | | | | | √ | | √ | | | | √ | | √ | √ |
| | P-170250 | Screw | | | | | | | | | | | | | | | | | | | | | | | | | | √ | | | | | | | | | | | | | | | | |
| 516 | P-170478 | Pipe Plug | | | | | | | | | √ | √ | √ | √ | √ | √ | | √ | | √ | √ | | √ | | | | | | | | | | √ | √ | √ | | √ | | | | | | | |
| 517 | P-290149 | Plug | | | | | | | | | √ | √ | √ | | | √ | | √ | | √ | √ | | √ | | | | | | | | | | √ | √ | √ | | √ | | | | | | | |
| 518 | P-125436 | Plug | | | | | | | | | √ | √ | √ | | | √ | | √ | | √ | √ | | √ | | | | | | | | | | √ | √ | √ | | √ | | | | | | | |
| 519 | P-170534 | Plug | | | | | | | | | | | | | | √ | | √ | | √ | √ | | | | | | | √ | | | | | | | √ | | √ | | | | | | | √ |
| 520 | P-170582 | Washer | | | | | | | | | | | | | | √ | | √ | | √ | √ | | | | | | | √ | | | | | | | √ | | √ | | | | | | | √ |
| 521 | P-173657 | Plug | | | | | | | | | | | | | | √ | | √ | | √ | √ | | | | | | | √ | | | | | | | √ | | √ | | | | | | | √ |
| 522 | P-170582 | Washer | | | | | | | | | | | | | | √ | | √ | | √ | √ | | | | | | | √ | | | | | | | √ | | √ | | | | | | | √ |
| 523 | P-173778 | Plug | | | | | | | | | | | | | | | | | | | | | | | | | | | | | | | | | | | | | | | √ | | √ | |
| 524 | P-170581 | Washer | | | | | | | | | | | | | | | | | | | | | | | | | | | | | | | | | | | | | | | √ | | √ | |
| 525 | P-170467 | Guard | | | | | | | | | | | | | | | | | | | | | | | | | | | | | | | | | | | | | | | √ | | √ | |
| 526 | P-143360 | Screw | | | | | | | | | | | | | | | | | | | | | | | | | | | | | | | | | | | | | | | √ | | | |
| 527 | P-170468 | Pad | | | | | | | | | | | | | | | | | | | | | | | | | | | | | | | | | | | | | | | √ | | √ | |
| 528 | P-172262 | Screw | | | | | | | | | | | | | | | | | | | | | | | | | | | | | | | | | | | | | | | | √ | | |

| ITEM NO. | PIECE PART NUMBER | NAME | BRACKETS - MOTOR MOUNTING BRACKETS | | | | | | | | | |
|---|---|---|---|---|---|---|---|---|---|---|---|---|
| | | | 1A | 2A | 2C | 2D | 4A | 4B | 4C | 5A | 5B | 5C |
| 600 | 3/32"x1" | Cotter Pin (steel) Hammerlock Type | | | | √ | | | √ | | | √ |
| | No.000 | Std. Taper Pin - 7/8" long-.147" dia. at large end | √ | √ | √ | | √ | √ | | √ | √ | |
| 601 | P-147328 | Spring | √ | √ | √ | √ | √ | √ | √ | √ | √ | √ |
| 602 | P-154170 | Pin | √ | √ | √ | √ | √ | √ | √ | √ | √ | √ |
| 603 | 3/8"-16 x 1/2" | Bristo Set Screw - Flat Point | √ | √ | √ | | √ | √ | | √ | √ | |
| | 3/8"-16 x 5/8" | Bristo Set Screw Flat Point | | | | √ | | | √ | | | √ |
| 604 | P-170259 | Spring | | | √ | √ | | √ | √ | | √ | √ |
| | P-147326 | Spring | √ | √ | | | √ | | | √ | | |
| 605 | P-170295 | Gib | | | | √ | | | √ | | | √ |
| | P-147322 | Gib | √ | √ | √ | | √ | √ | | √ | √ | |
| 606 | P-123753 | Washer | √ | √ | √ | √ | √ | √ | √ | √ | √ | √ |
| 607 | 3/32"x1/2" | Cotter Pin (steel) | √ | √ | √ | √ | √ | √ | √ | √ | √ | √ |
| 608 | P-154169 | Clamping Handle | √ | √ | √ | √ | √ | √ | √ | √ | √ | √ |
| 609 | P-147323 | Stud | √ | √ | √ | | √ | √ | | √ | √ | |
| | P-170294 | Stud | | | | √ | | | √ | | | √ |
| 610 | P-160120 | Nut | √ | √ | √ | √ | √ | √ | √ | √ | √ | |
| 611 | P-147285 | Screw | √ | √ | √ | √ | √ | √ | √ | √ | √ | |

## 3. REPLACEMENT PROCEDURES

### 3.01 List of Tools, Gauges and Materials

| Code No. | Description |
|---|---|
| **Tools** | |
| 45B | Hex. Single-End Socket Wrench |
| 245 | 3/8" and 7/16" Hex. Open Double End Flat Wrench |
| 246 | 1/2" Hex. Open Single End Flat Wrench |
| 271 | 13/16" Hex. Open Single End Flat Wrench |
| 295 | 5/16" Bristo Set Screw Wrench (4 flutes) |
| 296 | 3/8" Bristo Set Screw Wrench |
| 344 | Offset Screwdriver |
| 388A | 3/16" and 1/4" Hex. Open Double End Offset Wrench |
| 453A | Swivel Spanner Wrench |
| 521A (2 required) | Offset Screwdriver |
| - | R-6200 Oil Pipe Bender (1/2" Oil Pipe) |
| - | R-8020 Oil Pipe Bender (1/4" Oil Pipe) |
| - | Ball Peen Hammer - 1 Lb. |
| - | Knife |
| - | Combination Pliers |
| - | 6-1/2" P-Long Nose Pliers |
| - | 3/32" Pin Punch |
| - | Hack Saw (Frame) |
| - | 3" Cabinet Screwdriver |
| - | 4" Regular Screwdriver |
| - | 5" Regular Screwdriver |
| - | KS-19053, L1 |
| - | KS-19053, L1 Double Grip Screwdriver |
| - | R-62706 Forming Tool (1/4" Oil Pipe) |
| - | R-62944 Forming Tool (1/2" Oil Pipe) |
| - | KS-6367 7/16" and 5/8" Hex. Open Double End Flat Wrench |
| - | KS-8097 5/16" and 5/8" Offset Box Wrench |
| - | R-1317 5/8" Hex. Offset Socket Wrench |
| - | R-1770 1/2" and 9/16" Hex. Open Double End Flat Wrench |
| R-2485 | Allen Socket Screw Wrench |
| R-2812 | Allen Socket Screw Wrench |
| - | R-5850 5/8" and 3/4" Hex. Open Double End Offset Wrench |
| - | R-6440 3/8" Square Wrench |
| - | 3/4" and 7/8" 12 Point Box Wrench - Williams |
| - | 15/16" and 1" Hex. Flat Open Double End Engineer's Wrench |
| **Gauges** | |
| - | R-8550 Steel Scale - 6" |
| **Materials** | |
| - | KS-14666 Cleaning Cloth or replaced D-98063 Cloth |
| - | KS-6824 Sealing Compound |
| - | KS-7860 Petroleum Spirits |
| - | Quick Drying Paint (To match apparatus) |
| - | Receptacles for Drained Oil |

3.02 Before stopping a drive to make any of the replacements specified herein, ascertain whether it is necessary to make any of the associated circuits busy. Circuits which are so affected shall be made busy in the approved manner.

3.03 When it is necessary to remove a gear case or bearing box cover or an oil pipe or any part that will cause oil leakage in order to effect the replacement of any part, allow the oil in the gear case or bearing box to drain into a suitable container. To do this, remove the drain and filling plugs with the No. 245, No. 388A, the KS-6367, KS-8097 or the R-6440 wrench, depending on the size of the plug and shape of the plug head.

3.04 If a gear case cover is removed for any reason and the gear case is equipped with an oil screen, remove the oil screen as experience has indicated that it is no longer needed.

3.05 After the changes have been made, any part on which a seal may have been broken should be cleaned and resealed as outlined in the section covering this apparatus. In some cases it may be more economical to replace screws that have been removed from sealed joints with new screws rather than clean old screws.

3.06 After the gear case or bearing box has been reassembled, insert and seal the drain plug in place. Where the drain plug is a taper plug, insert the plug 1/4 of its length into the gear case or bearing box. Then paint the remaining threads with the KS-6824 sealing compound and tighten the plug in place. Where the plug is not a taper plug, do not apply the sealing compound to either the plug or gasket. Take care in tightening the plug not to tighten it too tight to avoid shifting the position of the gear case. Where a paraprene gasket is used, an effective seal will not be obtained when the plug is excessively tightened due to the gasket tending to be squeezed out of place. Paraprene gaskets may be recognized as such by a strong sulphur odor when the gaskets are new.

3.07 After the sealing compound has hardened, touch up the joint with a quick drying paint that matches the original finish.

3.08 After the replacement of any part that requires the draining of the oil, fill the gear case or bearing box with oil to the level specified in the section covering this apparatus and insert and tighten the filling plug finger tight, except where the plug is a taper plug and is mounted in the face of the cover. In this case, seal the plug as outlined in 3.06.

3.09 After making any replacement of parts of a friction roll drive or associated motor bracket the part or parts replaced shall meet the readjust requirements involved as specified in the section covering this apparatus. Other parts whose adjustments may have been disturbed by the replacing operations shall be checked to the test requirements and an overall operation check shall be made of the drive before restoring the circuits to service.

3.10 No replacement procedures are specified for screws or other small parts when the operation consists of a single simple operation.

3.11 Guard (Coupling)

(a) Where Guard Is Secured by Screws: To replace a guard, loosen the mounting screws, when necessary, with the 4-inch regular screwdriver and remove the guard. Substitute the new part and tighten the mounting screws securely.

(b) Where Guard Is Secured by Studs and Nuts: To replace a guard, loosen the nuts using the No. 45B wrench and remove the guard. Substitute the new part and tighten the nuts securely.

Coupling Assembly, Pins and Washer

3.12 Coupling Assembly: To replace a coupling assembly remove the guard as outlined in 3.11 and remove the motor. To do this, remove the plugs that furnish the source of power for the motor. Operate the clamping handle located under the bracket and remove the motor and associated coupling assembly from the motor bracket. Take care not to break the motor stop alarm wires. If necessary, disconnect the wires. If the washer requires replacement, remove it and substitute the new part. To replace a coupling assembly, remove the Bristo set screws from the assembly with the No. 295 wrench and remove it from the shaft. Note the condition of the coupling assembly and pins. If the assembly appears satisfactory but the pins are worn, replace the pins as outlined in 3.13. If the assembly appears worn, replace it. Remove the Bristo set screws from the defective part and insert them in place in the new part. Mount the coupling assembly in place but do not tighten the set screws and remount the motor in place.

Slide the coupling that was just mounted forward on its shaft until it is in its correct position and then tighten the set screws securely in place.

3.13 Pins: To replace a pin, place the coupling assembly in a vise with the pins projecting downward. Drive the defective pin from the coupling with the pin punch and ball peen hammer. Remove the coupling assembly from the vise. Make the necessary substitution of parts and proceed as follows. Hold the pin in place in the coupling assembly so that the pin is perpendicular to the assembly and place the parts in the vise with the pin against one of the jaws of the vise and the coupling assembly against the other jaw. Close the jaws of the vise against the pin and the coupling assembly forcing the pin in its proper position. Remount the assembly in place as outlined in 3.12.

3.14 Washer: To replace the washer, remove the motor as outlined in 3.12 and remove the washer. Substitute the new part in place over the pins and remount the motor.

## Alarm Mechanism and Parts

3.15 General: To replace any part of an alarm mechanism proceed as outlined in paragraphs 3.17 to 3.22. Where the cover of the link type alarm mechanism is in one piece, split the cover into two parts as outlined in 3.16 before removing the cover, except when the cover is to be replaced in which case do not split it.

3.16 Splitting Housing Cover When Mounted on Drive: Starting at the long side of the housing cover, scribe a line across the cover, 60° with the long side, to a point just above the boss for the mounting screw on the short side of the cover. Saw the cover along this line with a hack saw to a depth of approximately 1/16" deep. Do not saw the cover all the way through. Remove the cover mounting screw at the top with the 4" regular screwdriver and insert the blade of a 5" regular screwdriver between the cover and the housing at a point directly to the rear of the top screw hole. With the screwdriver in this position as shown in Fig. 76A, force the cover from the housing until the cover snaps off at the sawed slot.

Note: In performing this operation it may be necessary to pry the cover and housing slightly apart in order to permit the screwdriver to be inserted. This may be done by inserting the 4" regular screwdriver in the opening provided for access to the alarm spring retaining screws. Do not loosen the cover mounting screws to permit the screwdriver to be inserted as the seal around the lower portion of the cover will be broken.

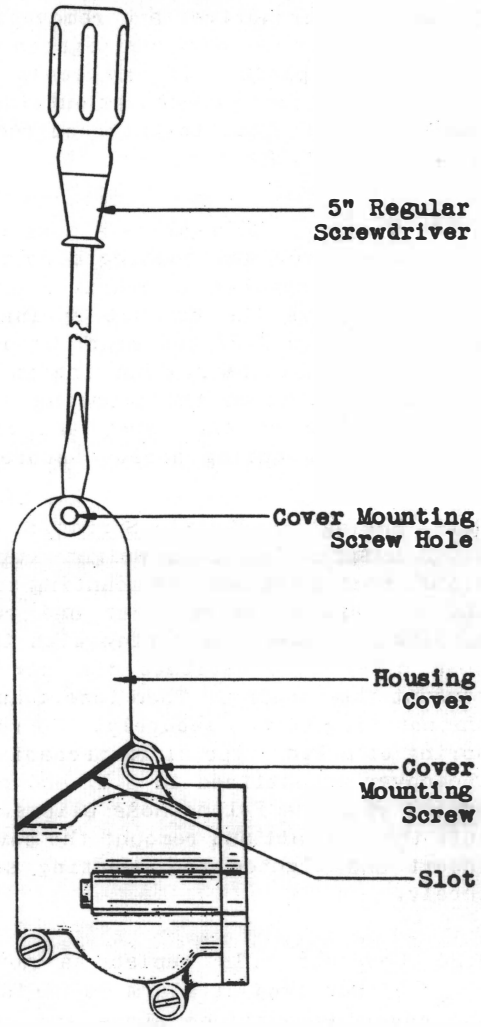


Fig. 76A - Illustrating Splitting of Alarm Housing Cover

3.17 Housing Cover: To replace a cover that is sealed, remove the cover mounting screws with the No. 344 screwdriver or the 4" regular screwdriver and remove the cover. The replacing cover is in one piece. In order to eliminate the necessity of breaking oil seals to gain access to the alarm springs or wiring, with the resultant possibility of introducing oil leaks, break the cover into two parts at the slot as follows. Place the

straight portion of the cover up to the slot in a vise. Close the vise to hold the cover securely in place. Hit the cover sharply with the ball peen hammer at a point above and in a direction away from the slot until the cover is broken into two pieces. In mounting these pieces, seal the lower piece in accordance with approved procedures. Do not seal the upper piece. To replace a cover that is not sealed, remove the mounting screw with the 3" cabinet screwdriver and remove the cover. Substitute the new part and tighten the screws securely in place. If any seals have been broken clean the surfaces as outlined in 3.05 and refill with oil to the required level as outlined in 3.08.

3.18 Housing: To replace a housing, remove the cover and housing mounting screws with the 4" regular screwdriver as outlined above. Remove the contact spring assembly as outlined in 3.22 and mount it in the new housing. Mount the new housing in place and insert and tighten the mounting screws securely. Remount the cover and insert and tighten the mounting screws securely.

3.19 Spring (Retractile Spring): To replace a spring on cast weight alarm mechanisms, remove the housing mounting screws with the 4" regular screwdriver and remove the housing. Remove the spring with the P-long nose pliers. Substitute the new part and remount the housing. Then insert and tighten the mounting screws securely. To replace the spring of a link type alarm mechanism, remove the cover as outlined in 3.17 and remove the spring with the P-long nose pliers. Substitute the new part and remount the cover. Then insert and tighten the mounting screws securely.

3.20 Governor: To replace a governor of either type of alarm mechanism, remove the cover as outlined above and remove the governor housing mounting screws with the 4-inch regular screwdriver. If a governor of the cast weight alarm mechanism is to be replaced, remove the cotter pin and springs with the P-long-nose pliers. Substitute the new part. If this part interferes with the housing, file off a portion of the arm as shown in Fig. 76B. Remount the springs and insert the cotter pin and spread the ends to secure it in place. If the governor of a link-type alarm mechanism is to be replaced, remove the clamping screws with the 4-inch regular screwdriver and slide the governor off the shaft. Substitute the new assembly and insert and tighten the screws securely. Remount the governor housing securely in place.

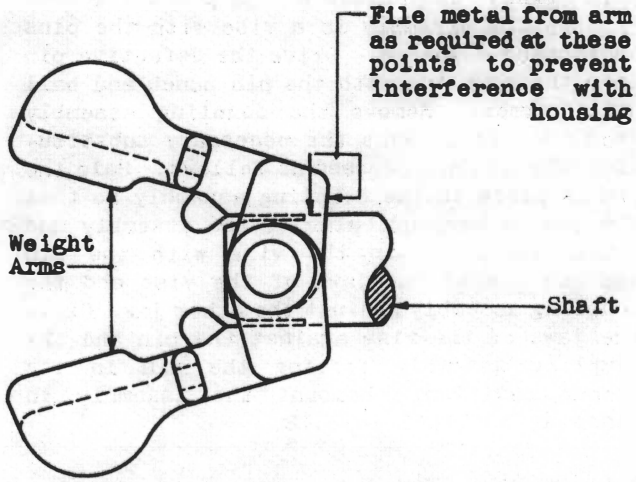


Fig. 76B Weight Arms of Cast Weight Alarm Mechanism

3.21 Pin (Plunger Pin): To replace a pin on alarms having cast weight governors, remove the housing as outlined in 3.18 and remove the cotter pin from the plunger pin with the P-long nose pliers. Remove the pin and substitute the new part. Insert the cotter pin through the pin and remount and secure the housing as outlined in 3.18.

3.22 Contact Spring Assembly: To replace any part of the contact spring assembly, remove the housing cover as outlined in 3.17 and remove the spring assembly mounting screws with the 3" screwdriver. Make the necessary replacement of parts, reassemble the contact spring assembly and insert and tighten the mounting screws securely.

Worm and Associated Parts

3.23 General: To replace the worm or any of the associated parts of any drive, remove the coupling assembly and alarm housing as outlined in 3.12 and 3.18, respectively. In replacing parts of No. 45A, 46A, 47A or 48A drives, remove the gear case cover as outlined in 3.50. After making the necessary replacement of parts, remount the parts that were removed and clean and reseal the parts as outlined in 3.05 wherever seals were broken and refill the gear case as outlined in 3.08.

3.24 Spring (All Drives Except Nos. 35A, 45A, 46A, 47A, 48A and 49A Drives): To replace the spring that may be located in the housing assembly, remove the spring from its mounting hole and substitute a new one. If the housing is associated with the No. 17B, 18D, 19B, 20C, 20D or 23J Drive, the lead end of the spring must bear against the side of the rib in the worm case housing assembly in such a position that it does not touch the worm case housing assembly or housing assembly adjacent to the 1/4" oil hole. On other drives which are equipped with a spring, the lead end of the spring shall be tensioned against the side of the rib in the worm case housing assembly as shown in Fig. 25.

3.25 Housing Assembly (All Drives Except Nos. 35A, 45A, 46A, 47A, 48A and 49A Drives): To replace the housing assembly break the seal and remove the housing assembly. If a spring is mounted in the housing remove it and mount it in the new housing unless both the housing assembly and worm case housing is being replaced as a unit (see Fig. 25(b)). In this case, discard the spring. Substitute the new part taking care that the spring, if furnished, is mounted as outlined in 3.24 and tighten the mounting screws securely. Mount the spring in place in the housing assembly as outlined in 3.24.

3.26 Thrust Bearing (All Drives Except Nos. 35A, 45A, 46A, 47A, and 49A Drives): To replace the bearing, remove the housing assembly as outlined in 3.25 and slide the thrust bearing off the worm shaft. Substitute the new part and remount the housing assembly as outlined in 3.25.

Note: If the shaft is equipped with a washer adjacent to the bearing, remove the washer when replacing the bearing.

3.27 Worm (All Drives Except Nos. 35A, 45A, 46A, 47A, 48A and 49A Drives): To replace a worm, remove the housing assembly and thrust bearing as outlined in 3.25 and place them on the new worm. Reassemble the parts as outlined in 3.26.

3.28 Clamp Nut (Nos. 35A, 45A, 46A, 47A, 48A and 49A Drives): To replace a clamp nut, on all these drives except the Nos. 35A and 49A drives, remove the gear case cover. On the No. 35A and 49A drives, remove the worm case housing as outlined in 3.32. With either the gear case cover or worm case housing removed, slide the worm assembly out of the cover or housing, remove the clamp nut lock screw with the 3" cabinet screwdriver and remove the clamp nut with the 15/16" wrench. Substitute the new part and insert and tighten the lock screw securely.

3.29 Washer (Nos. 35A, 45A, 46A, 47A, 48A and 49A Drives): To replace the washer between the clamp nut and ball bearing, remove the clamp nut as outlined in 3.28 and remove the washer. Substitute the new washer and remount and tighten the clamp nut securely.

3.30 Ball Bearing (Nos. 35A, 45A, 46A, 47A, 48A and 49A Drives): To replace a ball bearing, remove the clamp nut and washer, if used, from the end on which the bearing is to be replaced, and remove the bearing. Substitute the new part and remount the washer and clamp nut securely in place.

3.31 Worm (Nos. 35A, 45A, 46A, 47A, 48A and 49A Drives): To replace a worm, remove the clamp nuts, washer and ball bearings and place them on the new part. Then secure the parts as outlined in 3.30.

3.32 Worm Case Housing (All Drives Except Nos. 45A, 46A, 47A and 48A Drives): To replace the worm case housing, remove the worm case housing mounting screws with the 4" regular screwdriver or No.344 screwdriver and remove the worm case housing. Remove the worm assembly from the worm case housing. Place the housing assembly and worm assembly in the new housing taking care that the spring is positioned as outlined in 3.24. Mount the housing in place against the gear case, pressing the housing up against the gear case cover to insure proper seating. Tighten the mounting screws securely. Be sure that the worm rotates freely before mounting the worm case housing.

Oil Sight Assembly

3.33 To replace any part of the lower oil sight assembly, remove the oil sight clamping ring with the No. 453A wrench, make the necessary substitution of parts. If the glass is not to be replaced, clean it at this time. Remount and securely tighten the parts in place.

3.34 To replace any part of the upper oil sight assembly proceed as outlined in 3.33 except that it is unnecessary to drain the gear case or bearing box.

Roll Guards and Associated Felt Washers

3.35 Roll Guards: To replace a roll guard that is not threaded into the cover, remove the mounting screws with the No. 344 screwdriver or the 4" regular screwdriver. If the guard is sealed, insert the screwdriver under the edge of the guard and pry it off the housing. To remove a roll guard that is secured to the cover by threads, insert the 5" regular screwdriver into the slot in the cover and loosen the guard. With the

guard loosened, remove it with the fingers. Substitute the new guard and, if necessary, seal it before mounting it in place.

3.36 Felt Washers: To replace a felt washer in a roll guard, remove the guard and pry out the washer that is located in the base on the roll guard. Soak the new washer in the KS-6824 sealing compound and insert it in place in the guard. Remount the guard in place.

Oil Pipe Supports, Oil Pipes and Associated Parts

3.37 Oil Pipe Supports: To replace an oil pipe support, proceed as follows. Raise the brush rod associated with the rack in front of the oil pipe support manually until the rack clears the support. Hold the support mounting screw nut with one hand and remove the support mounting screw with the 4" regular screwdriver. Remove the support. Substitute the new support and insert and securely tighten the mounting screw and nut. Restore the brush rod to normal by operating the down drive armature manually and guide the brush rod down by hand.

3.38 Compression Sleeves and Compression Nuts: If a compression sleeve or a compression nut is to be replaced, replace the entire assembly. To do this proceed as follows. Back off the compression nut with the No. 271 wrench (for the large nuts) or the No. 246 wrench (for the small nuts). Cut off the portion of the oil pipe between the end of the compression sleeve furthest from the free end of the oil pipe and the end of the oil pipe with the hack saw. If the pipe is not long enough to do this replace the pipe as outlined in 3.40 to 3.45 inclusive. Make sure that the cut is made squarely across the pipe. If necessary form the pipe as outlined in 3.41. Remove any burrs on the end of the pipe with a knife. Slide the compression nut over the end of the oil pipe. Place the compression sleeve over the end of the oil pipe and slide the sleeve back on the pipe about 1/4". Do not use sleeves that are bent or distorted. Insert the end of the oil pipe into the elbow or connector as required until it strikes the inside of the elbow or connector. Mount the oil pipe in place and securely tighten the compression nut.

Note: To insure a tight joint at the union it is important that the copper pipe enter the brass fitting straight and without any strain. If necessary, bend the pipe to meet this condition. Avoid sharp bends and kinks.

3.39 Elbows and Connectors: To replace an elbow or connector, back off the compression nut as outlined in 3.38. Remove the oil pipe from the elbow or connector and remove the defective part from the gear case or bearing box with the combination pliers. Substitute the new part, sealing it with the KS-6824 sealing compound and tighten it securely in place. Remount the oil pipe in place and securely tighten the compression nut.

3.40 Oil Pipes: If it is necessary to replace an oil pipe, replace the oil pipe and the compression sleeves and nuts at each end of the oil pipe as a unit. To do this proceed as follows: Remove the oil pipe supports and compression nuts as outlined in 3.37 and 3.38. Mount the new compression nuts and sleeves on the new oil pipe as outlined in 3.38.

3.41 Before substituting the new oil pipe, check to see that the ends of the pipes are not burred and are perfectly round. If the end of the pipe is not round, insert the R-62706 or the R-62944 forming tool in the pipe and turn it with a rotary motion. Use the R-62706 tool on 1/4" pipes and the R-62944 tool on 1/2" pipes.

3.42 Tighten each compression nut finger tight and then tighten each nut with the specified wrench but not tight enough to crush or dent the copper tube or sleeve.

Note: To insure a tight joint at the union it is important that the copper pipe enter the brass fitting straight and without any strain. If necessary, bend the pipe to meet this condition. Avoid sharp bends and kinks.

3.43 If a 1/2" pipe is to be replaced and an eccentric bushing prevents the pipe from being assembled into the brass fitting straight and without strain, bend the pipe as required with the R-6200 oil pipe bender.

3.44 If a 1/4" pipe is to be replaced and the pipe will not enter the brass fitting due to the fitting being screwed into the casing at an angle, insert the R-8020 oil pipe bender into the pipe as far as it will go and bend the pipe as required.

3.45 With the pipes satisfactorily fitted in the elbows or connectors, remount the pipe supports on the bottom channel as outlined in 3.37.

Oil Pump and Associated Parts Mounted in Gear Case

Drives with Pump Housing

3.46 Spur Gears and Associated Stub Shaft: To replace a spur gear or stub shaft, remove the oil pump housing mounting screws with the No. 344 screwdriver and remove the housing from the gear case. If the gear to be replaced is mounted on the shaft in the housing, remove it and substitute the new gear. If the stub shaft is to be replaced,

remove the spur gear and remove the shaft. Substitute the new part and mount the spur gear in place on the shaft. If the stub shaft is not removable, replace the housing as outlined in 3.47. If the spur gear is mounted on the lower vertical shaft, slide it off the Woodruff key. Substitute the new gear, taking care that the keyway in the gear is placed over the key in the shaft. Then clean and reseal the surfaces where the seals were broken as outlined in 3.05 and remount the oil pump housing securely in place.

3.47 Oil Pump Housing: To replace an oil pump housing, proceed as outlined in 3.46 to remove the housing from the gear case. Remove the spur gears and shaft from the housing as outlined in 3.46 and mount the parts in the new housing. Securely mount the housing in place on the gear case.

Drives with Oil Pump Covers

3.48 Oil Pump Cover: To replace an oil pump cover, remove the oil pump cover mounting screws with the No.344 screwdriver. Remove the cover, taking care that the stub shaft and associated spur gear do not drop out of the gear case. Substitute the new cover and insert and tighten the mounting screws securely.

3.49 Spur Gear and Associated Stub Shaft: To replace a spur gear or associated stub shaft, remove the cover as outlined in 3.48, allowing the shaft and gears to drop out of the gear case. In replacing either the spur gear or stub shaft, remove the gear from the shaft and substitute the new part. Then place the assembly in the gear case and remount the cover as outlined above. If the spur gear mounted on the lower vertical shaft is to be replaced, slide it off the Woodruff key. Substitute the new gear, taking care that the keyway on the gear is placed over the key in the shaft. Then reassemble the other spur gear on the shaft and mount the assembly in the gear case. Remount the cover as outlined in 3.48.

Gear Case Cover and Associated Gasket

3.50 Gear Case Cover: To replace a gear case cover, remove the gear case cover mounting screws, with the No. 344 screwdriver or the 4" regular screwdriver and loosen the cover by tapping it lightly. On Nos. 45A, 46A, 47A and 48A drives on which the gear case cover and worm case housing are cast in one piece, it will be necessary to remove the coupling assembly as outlined in 3.12 before removing the cover. On these drives, the governor housing and worm assembly will be removed with the gear case cover. Remove these parts from the cover as outlined in 3.12 and 3.18 and mount them on or in the new cover. Clean and reseal the parts wherever seals have been broken as outlined in 3.05 and mount the new cover in place on the gear case and insert and tighten the mounting screws securely. Then remount the coupling assembly.

3.51 Gasket: To replace a gasket, remove the gear case cover as outlined in 3.50 and remove the gasket. In some cases, it may be necessary to remove the lower gear case cover to remove the gasket. Clean and reseal the sealed surfaces as outlined in 3.05. Substitute the new part and remount the gear case cover securely in place.

Gear Case - Internal Parts

(Single Speed Drives - Except Nos. 35A and 49A Drives)

3.52 General: To replace a gear, shaft or washer, remove the gear case cover as outlined in 3.50. If the part to be replaced is mounted on the upper or lower vertical shaft, remove the coupling assembly and worm case housing as outlined in 3.12 and 3.32. After making the necessary replacements, remount the parts that were removed as outlined in these paragraphs and clean and reseal parts as outlined in 3.05 wherever a seal has been broken and then refill the required level as outlined in 3.08.

3.53 Gears (A) and (B): In general, gears (A) and (B) make up an assembly and are mounted on the upper friction roll shaft. However, in some cases gear (B) is omitted. When the gear assembly is used, the rear gear (B), is keyed to the hub of the outer gear, (A), with a Woodruff key while the outer gear, (A), is keyed to the friction roll shaft. When only gear (A) is used, it is also keyed to the friction roll shaft. To replace either gear (A) or (B), where furnished, straighten and remove the cotter pin from the friction roll shaft with the P-long nose pliers. Remove the castellated nut from the shaft with the R-1317 wrench and remove the washer. Slide the gear or gear assembly off the shaft and remove the Woodruff key from the shaft. If both gears are defective, replace them as an assembly. If either gear is defective, separate the assembly. If gear (A) is to be replaced, remove the Woodruff key from the hub of the gear and place it in the slot of the new gear. Slip gear (B) onto the hub of gear (A) so that the keyway in the gear slides over the key in gear (A).

3.54 Before placing the gears on the shaft, rotate the friction roll so that the keyseat is uppermost and place the Woodruff key in the slot. Then slide the gear onto the shaft so that the keyway in the hub of the gear is at the top permitting the gear to slip over the Woodruff key. If the gear binds on the key, it is an indication that the key has slipped out of place. To check this and to guide the gear over the key, rotate the gear and shaft 1/4 turn in a

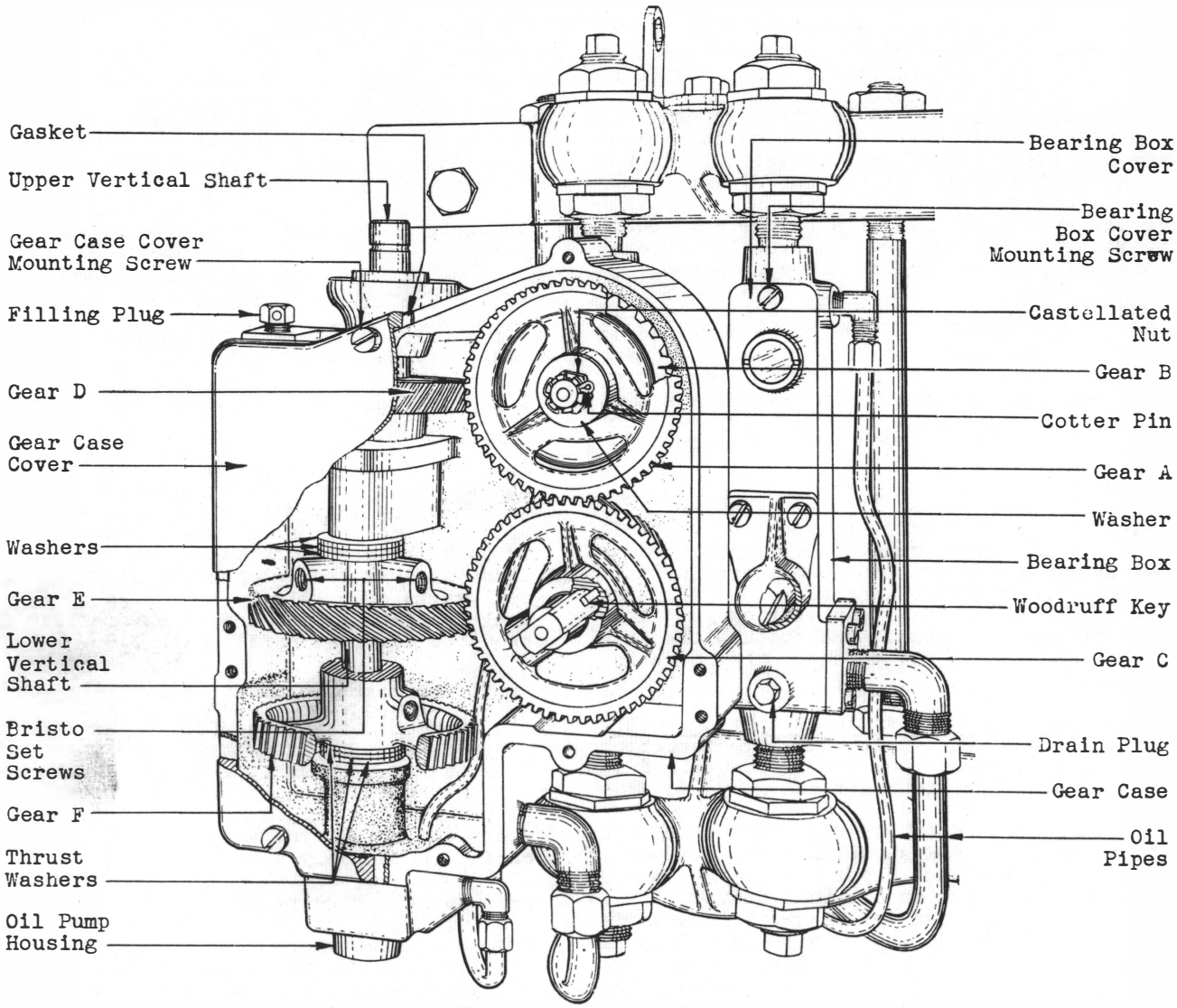


Fig. 77 - Gear Train Assembly for Single Speed Drives

counter-clockwise direction and with a finger behind the gear keep the key located properly in the slot. If the gear still jams on the key, back off the gear and shift the key into position, then while holding the key in this position, slip the gear over the key. Before securing the gear make sure that the gear hub rests against the shoulder of the shaft.

3.55 Place the steel washer and castellated nut over the end of the shaft and tighten the nut securely with the R-1317 wrench. Then insert the cotter pin in place and spread the split end with P-long nose pliers.

3.56 Gear (C): To replace gear (C), remove gears (A) and (B) as outlined above. Remove the outer Bristo set screws from the hub of the gear and loosen the inner screws with the No. 296 wrench. The removal of the set screws may be facilitated if the No. 245 wrench is used to turn the No. 296 wrench. Then slide the gear off the shaft. Remove the inner Bristo set screws and insert them in the new gear.

3.57 Substitute the new gear on the shaft guiding it as outlined in 3.52 and insert and tighten the Bristo set screws securely. Remount gears (A) and (B) as outlined in 3.53 to 3.55 inclusive.

3.58 Gears (E) and (F) and Lower Vertical Shaft: To replace gear (E), (F) or the lower vertical shaft proceed as follows:

The following paragraphs, 3.59 to 3.68 primarily apply to the worm end of the drive and the non worm end of converted drives. When replacing parts at the non worm end of the drive except in the case of a non worm end of a converted drive the procedures outlined in these paragraphs also apply except that all references to gear (F) should be disregarded.

3.59 Remove the oil pump from the gear case as outlined in 3.40. Measure and record the distance the lower vertical drive shaft extends beyond the outside bottom surface of the gear case with the end play taked up in a downward direction. Do this with the R-8550 steel scale.

3.60 Remove the outer Bristo set screws and loosen the inner screws in gears (E) and (F) with the No. 296 wrench. Slide the shaft downward through the casting enough to remove the part that is to be replaced. If gear (E) is to be replaced, remove it from the gear case. Remove the inner Bristo set screws from the gear and insert them in the new gear. Place the new gear on the shaft. If gear (F) is to be replaced, remove gears (E) and (F) and remove the Bristo set screws from gear (F) and insert them in the new gear. Place the new gear, then gear (E) on the shaft. If the thrust washer or lower shaft is to be replaced, remove gears (E) and (F) and the part to be replaced. Make the necessary replacement of parts and assemble in the reverse order. When removing the washers note the number used and their positions so that they may be correctly reassembled on the shaft.

3.61 Raise the lower vertical shaft to its original position with respect to the lower surface of the gear case as outlined in 3.59 and with gear (F) resting on the thrust washers, tighten the inner Bristo set screws securely. Do this so as to insure that the shaft will not rub on the bottom of the pump housing and that the Woodruff key which secures the spur gear of the pump will clear the bottom of the gear case.

3.62 Remount the oil pump and insert and fasten the oil pump mounting screws securely.

3.63 With gears (E) and (F) mounted on the shaft, raise gear (E) until it is in alignment with gear (C) on the friction roll shaft, and tighten the inner and outer Bristo set screws securely with the No. 296 wrench against the flats of the shaft. The alignment of the gears may be considered satisfactory if the horizontal center lines of the driving and driven gears are within 1/64" of each other. This alignment may be checked by placing the R-8550 steel scale on edge on the upper surface of the driving gears (gears (D) and (E)) and then on the under surface. Then insert and tighten the outer Bristo set screws in gears (E) and (F).

3.64 Gear (D) and Upper Vertical Shaft: To replace gear (D) or the upper vertical shaft, remove the lower vertical shaft as outlined above.

3.65 Remove the vertical drive shaft coupling from the upper vertical shaft as outlined in the section covering this apparatus.

3.66 To replace gear (D), remove the outer Bristo set screws and loosen the inner Bristo set screws with the No. 296 wrench. Slide the shaft downward enough to clear gear (D). Remove gear (D) from the gear case and remove the inner Bristo set screws and insert them in the new gear. Substitute the new part in the gear case. To relocate the shaft, place the lower half of the eccentric coupling against the shaft with the coupling pin in the slot of the shaft. Slide the shaft down through the parts until the coupling rests on the thrust washers.

Note: When the drive is not furnished with a coupling that connects the drive with a vertical drive shaft gear (D) is usually not furnished.

3.67 Remount the lower clamping portions of the eccentric coupling on the upper vertical shaft as outlined in the section covering this apparatus. Remount the lower vertical shaft and the gears mounted on it as outlined above and remount the gears mounted on the friction roll shafts.

3.68 With the friction roll gears satisfactorily secured and with the pin in the lower clamping portions of the eccentric coupling engaging the slot in the upper vertical shaft when the lower surfaces of the clamping portions are resting on the thrust washers, raise gear (D), if used, until it is in alignment with gear (B) as outlined in 3.66 and tighten the Bristo set screws.

Single Speed Drives Nos. 35A and 49A Drives

3.69 General: To replace a gear, shaft or washer, remove the gear case cover as outlined in 3.50. If the part to be replaced is mounted on the upper or lower vertical shaft, remove the coupling head assembly and worm housing as outlined in 3.12 and 3.32. After making the necessary replacements, remount the parts that were removed in accordance with these paragraphs and clean and reseal parts as outlined in 3.05 wherever a seal has been broken, and then refill to the required level as outlined in 3.08.

3.70 Gear (A): To replace gear (A) straighten and remove the cotter pin from the shaft with the P-long nose pliers. Remove

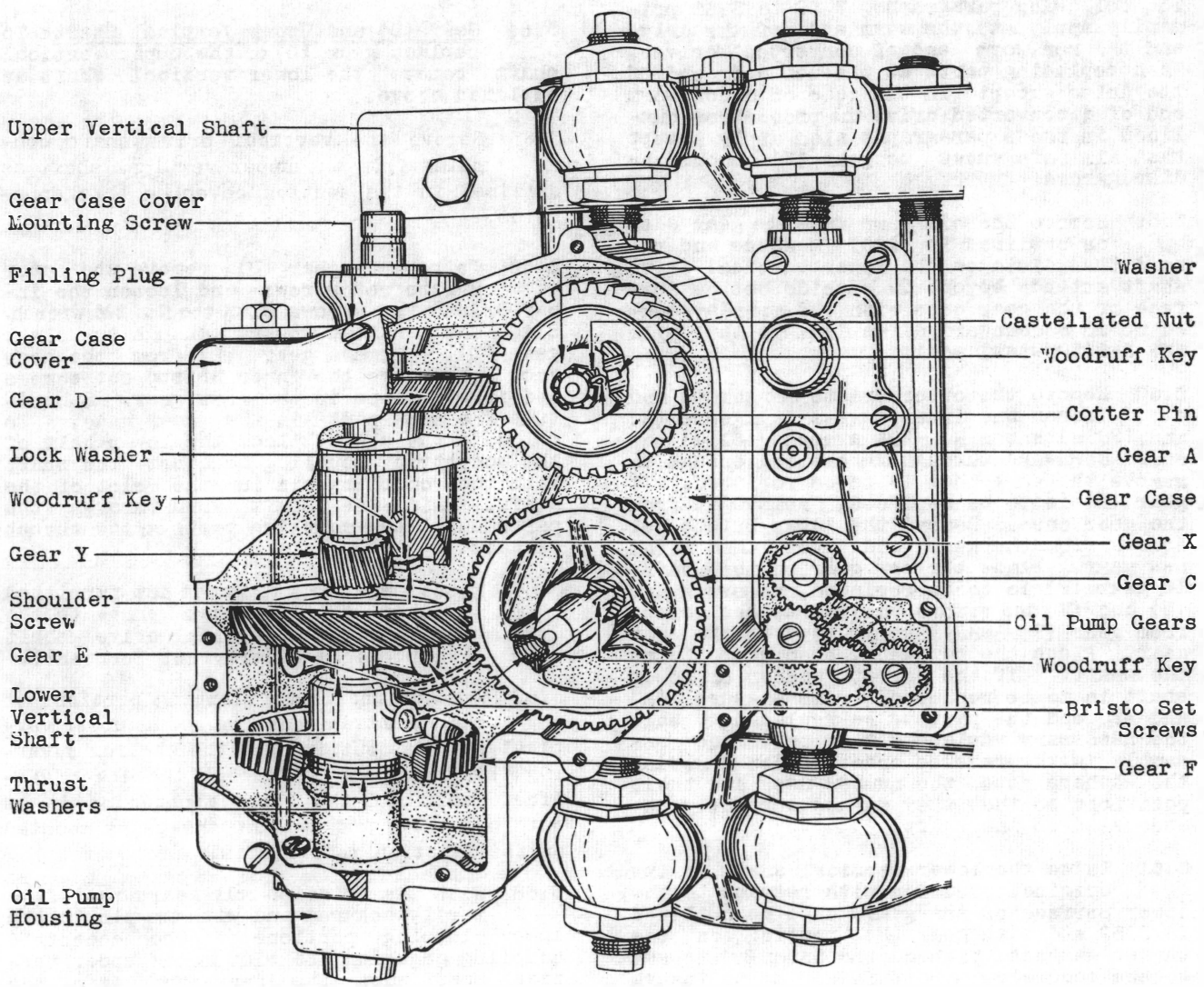


Fig. 78 - Gear Train Assembly for Worm End of Nos. 35A and 49A Drives

the castellated nut with the R-1317 wrench and remove the washer. Slide the gear off the shaft. Substitute the new gear on the shaft guiding it as outlined in 3.54 and remount the steel washer and castellated nut over the end of the shaft and tighten the nut securely with the R-1317 wrench. Insert the cotter pin in place and spread the split end with the P-long nose pliers.

3.71 Gear (C): To replace gear (C), remove the outer Bristo set screw from the hub of the gear and loosen the inner screw with the No. 296 wrench. Slide the gear off the shaft. Remove the inner Bristo set screws from the gear to be replaced and insert them in the new gear. Substitute the new gear on the shaft guiding it as outlined in 3.54 and insert and tighten the set screws securely.

3.72 Gears (E), (F), (Y), Thrust Collar, Thrust Washers and Lower Vertical Shaft: To replace any of the parts mounted on the lower vertical shaft proceed as follows: Measure the distance the shaft projects below the gear case as outlined in 3.58 and 3.59. In general these procedures apply to the worm end of the drive which is equipped with gear (F), however, they also apply to the non worm end on which a thrust collar is furnished instead of gear (F). Remove the outer Bristo set screws from gears (E) and (F) (or the set screw spring clip and Bristo set screw in the thrust collar, if furnished) with the No. 296 wrench and loosen the inner Bristo set screws with the same wrench. The removal of the screws will be facilitated if the No. 246 wrench is used to assist in turning the No. 296 wrench.

Gear (Y) consists of a gear and shaft in one piece. This shaft is secured to the lower vertical shaft by a left-hand thread. To remove the gear, insert the side of the blade of a No. 521A screwdriver in the slot in the gear that projects through the casting and turn the shaft until the slot in the gear is in such a position that the screwdriver will rest against the edge of the gear case. Insert the blade of another No. 521A screwdriver in the slot in the bottom of the lower vertical shaft and hit the handle of the screwdriver smartly turning the shaft in a clockwise direction while holding gear (Y) rigidly in place with the first screwdriver. After the shaft of gear (Y) is loose, separate the two shafts and lower the lower vertical shaft through the gear case. The amount this shaft is lowered is dependent on the part to be replaced. If either gear (E) or (F) or the thrust collar is to be replaced lower the shaft just enough to clear the part while holding gear (Y) in position. If gear (Y) or the thrust washers mounted above gear (Y) on the non worm end are to be replaced, remove gear (E) and gear (F) or the thrust collar as required, and lower gear (Y) until the shaft clears the casting in the gear case. Substitute the necessary new part and reassemble the parts as follows. Mount the upper thurst washers (non worm end) on the upper part of the shaft of gear (Y). Insert the end of the shaft of gear (Y) up through the casting. Then while holding gear (Y) in place with one hand, mount the three thrust washers, (a steel, a phosphor bronze and then another steel washer), on the lower casting. Then if the worm end of the drive is being reassembled place gear (F) in position with the mounting holes for the Bristo set screws above the teeth of the gear. If the non worm end of the drive is being reassembled place the thrust collar in position on the thrust washers. Place gear (E) on gear (F) or the thrust collar with the mounting holes for the Bristo set screws below the gear teeth and insert the lower vertical shaft up through the gear case, thrust washers, gear (F) or thrust collar and gear (E). Engage the threading on the lower vertical shaft and gear (Y) and while holding the gear rigidly in place, turn the shaft in a counter-clockwise direction with the No. 521A screwdrivers until the parts are tight. Check and position the lower vertical shaft as outlined in 3.59 and, if gear (F) or a thrust collar is used, tighten the Bristo set screw securely. Realign gear (E) with gear (C) as outlined in 3.63 and securely tighten the inner Bristo set screw. Insert and securely tighten the outer Bristo set screws in both gears (E) and (F) and remount the spring clip in the thrust collar. Remount the oil pump assembly as outlined in 3.62.

3.73 Shoulder Screw, Lock Washer, Gear (X) and Woodruff Key: To replace the shoulder screw, remove gear (Y) as outlined in 3.72. Hold the upper vertical shaft in position and remove the screw with the 7/8" box wrench or 4" regular screwdriver as required. Hold the lock washer in place on the shaft and substitute the new shoulder screw, tightening it securely with the specified tool. To replace the lock washer, remove the shoulder screw and washer. Substitute the new washer. Remount and tighten the shoulder screw securely. To replace gear (X), remove the shoulder screw and lock washer and remove gear (X). Gear (X) is keyed to the shaft by means of a Woodruff key and it may be necessary to force the gear downward in order to remove it. Examine the Woodruff key at this time and if it is defective, replace it. Substitute the new part on the shaft sliding the keyway in the gear over the Woodruff key. Remount the lock washer and shoulder screw as outlined above. Take care when doing this to tighten the screw securely so that gear (X) rests against the shoulder of the shaft.

3.74 Gear (D): To replace gear (D), remove the lower vertical shaft as outlined in 3.72 and gear (X) as outlined in 3.73. Remove the vertical drive shaft coupling. Remove the outer Bristo set screws and loosen the inner Bristo set screws on gear (D) with the No. 296 wrench. Slide the shaft downward enough to clear gear (D). Remove the gear from the gear case, remove the inner Bristo set screws and insert them in the new gear. Substitute the new part and insert the shaft through the gear. Remount the vertical drive shaft coupling and align gear (D) as outlined in 3.66. Then remount and align the other parts that were removed as outlined in 3.72.

3.75 Upper Vertical Shaft: To replace the upper vertical shaft, remove gear (D) as outlined in 3.74 and drop the shaft until it clears the casting. Remove the shaft from the gear case. Mount the new shaft in place in the gear case. Mount gear (X), the washer and shoulder screw on the shaft so outlined in 3.73. Mount gear (D) in place and align it as outlined in 3.74. Remount and realign the vertical shaft coupling.

Double Speed Drives (Except Nos. 45A, 46A, 47A and 48A Drives

3.76 General: To replace the gears, shafts or washers; remove the coupling assembly, gear case cover, and worm case housing as outlined in 3.12, 3.50 and 3.32. After making the necessary replacements, remount the parts that were removed in accordance with these paragraphs and clean and reseal parts as outlined in 3.05 wherever a seal has been broken and then refill to the required level as outlined in 3.08.

3.77 Gears (A) and (B): To replace either gear (A) or gear (B), straighten and remove the cotter pin from the upper friction roll shaft with the P-long nose pliers.

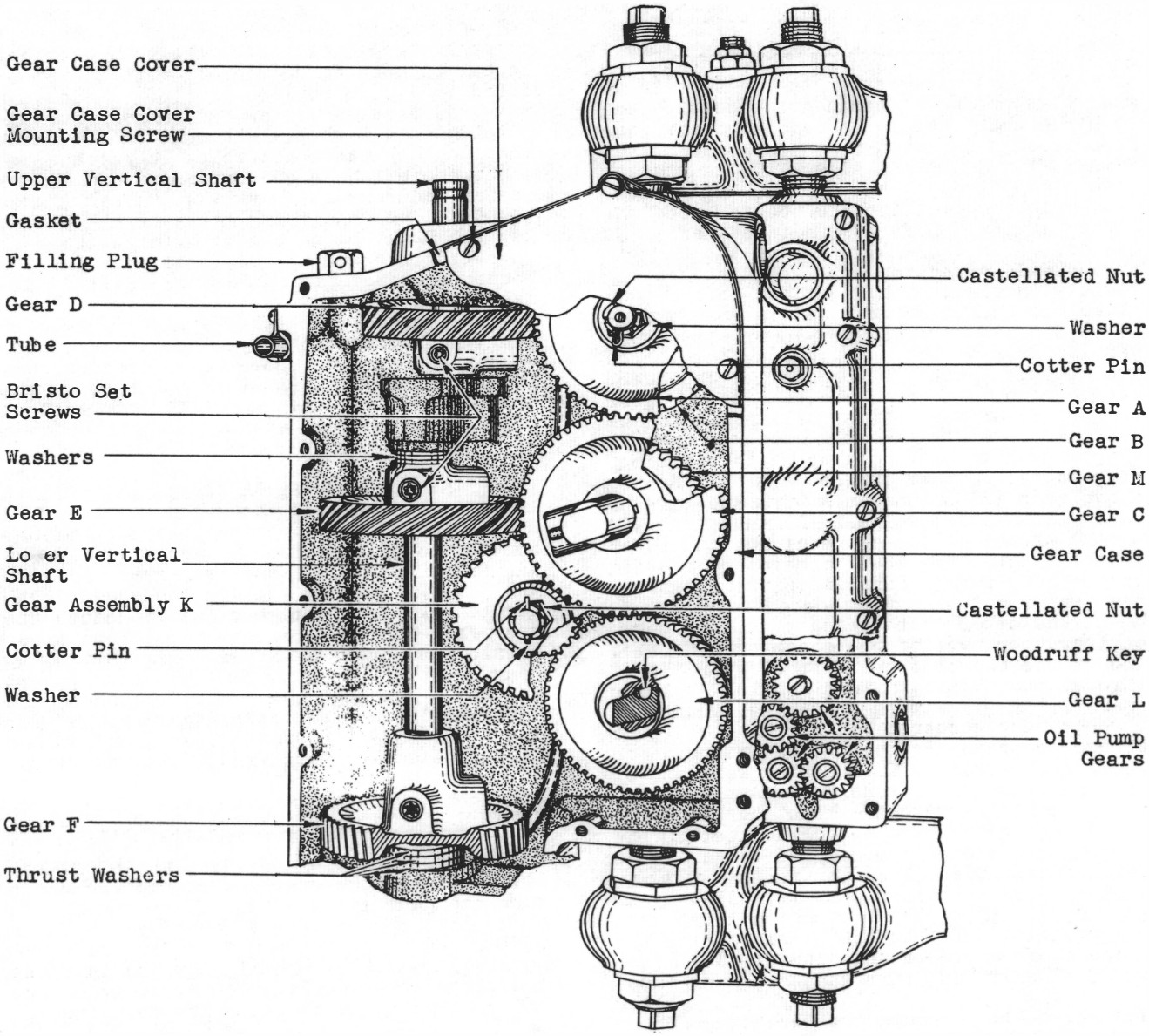


Fig. 79 - Gear Train Assembly for Double Speed Drives (Except Nos. 45A to 48A Drives)

Remove the castellated nut from the shaft with the R-1317 wrench and remove the washer. Slide the gear assembly off the shaft. The gear assembly consists of two spiral gears, (A) and (B); the rear gear (B) being keyed to the hub of the outer gear (A) with a Woodruff key while the outer gear (A) is keyed to the friction roll shaft. After removing the gear assembly, remove the Woodruff key from the shaft. If both gears are defective, replace them as an assembly. If either gear is defective, separate the assembly. If gear (A) is to be replaced, remove the Woodruff key from the hub of the gear and place it in the slot of the new gear. Slip gear (B) onto the hub of gear (A) so that the keyway in the gear slides over the key in gear (A). Reassemble the gears as outlined in 3.54.

3.78 Gears (C) and (M): To replace gear (C) or (M), remove gears (A) and (B) as outlined above. Remove the outer Bristo set screws in the hub of gear (C) and loosen the inner screws with the No. 296 wrench. Slide the gear assembly off the shaft. Slide gear (M) off the hub of gear (C) and, if gear (M) is defective, substitute a new gear. If gear (C) is defective, slide gear (M) off the hub and remove the Woodruff key and Bristo set screws. Substitute the key in the keyseat of the new gear. Slide gear

(M) onto the hub of gear (C) with the keyway in gear (M) over the Woodruff key. Remount gears (C) and (M) on the friction roll shaft as outlined in 3.54 and insert and tighten the Bristo set screws securely. Remount gears (A) and (B) as outlined in 3.77.

3.79 Gear Assembly (K), Intermediate Shaft and Associated Parts: To replace a part of gear assembly (K), or any part associated with the intermediate shaft, remove gears (A), (B), (C) and (M) as outlined above and proceed as follows. Straighten and remove the cotter pin from the shaft with the P-long nose pliers. Remove the castellated nut from the shaft with the R-1317 wrench and remove the washer. Slide the gear or the gear assembly off the shaft. To replace either gear of the assembly, slide the larger gear off the Woodruff key in the hub of the smaller gear. If the larger gear is defective, substitute a new gear. If the smaller gear is to be replaced, remove the Woodruff key from the hub of the gear. Slip the larger gear onto the hub of the smaller gear with the keyway in the larger gear over the Woodruff key. Place the gear assembly over the sleeve on the intermediate shaft with the small gear toward the gear case casting. If the sleeve is defective, remove the gear assembly from the intermediate shaft and remove the sleeve. Substitute a new sleeve and remount the gear assembly. If the intermediate shaft is defective, remove the gear assembly and sleeve. Drive the shaft from the gear case with the ball peen hammer and substitute the new part. Reassemble the sleeve and gear assembly on the shaft. Remount the washer and castellated nut, tightening the nut securely. Insert the cotter pin in place and spread the split end with the P-long nose pliers. Remount gears (C), (M), (A) and (B) as outlined above.

3.80 Gear (L): To replace gear (L), remove gears (A), (B), (C) and (M) and gear assembly (K) from the friction roll and intermediate shafts as outlined above. Remove the castellated nut as outlined above. Substitute the new part with the keyway in the new gear over the Woodruff key in the shaft. Remount the washer and castellated nut on the shaft and tighten the nut securely. Insert the cotter pin in place and spread the split end with the P-long nose pliers. Remount the gears that were removed as outlined above.

3.81 Gears (D), (E) and (F), Upper and Lower Vertical Shafts and Thrust Washers: To replace gear (D), (E), (F), the upper or lower vertical shaft or a thrust washer, remove the gears mounted on the friction roll and intermediate shafts as outlined above and proceed as outlined in 3.58 to 3.67 inclusive to make the necessary replacement of parts. With the gears on the upper and lower vertical shaft reassembled as outlined in these paragraphs, reassemble the friction roll shaft gears as outlined above.

Double Speed Drives (Nos. 45A and 46A Drives)

3.82 General: To replace the gears, shafts or washers, remove the coupling assembly and gear case cover as outlined in 3.12 and 3.50. After making the necessary replacement of parts, remount the parts that were removed as outlined in these paragraphs and clean and reseal parts as outlined in 3.05 wherever a seal has been broken. The replacement procedures outlined in 3.83 to 3.90 inclusive primarily apply to the worm end of the drive. When replacing parts on the non worm end of the drives, these procedures also apply, except that all references to gear (F) shall be disregarded.

3.83 Gear (A): To replace gear (A), remove the outer and inner Bristo set screws from the hub of the gear with the No. 233 wrench and remove the gear from the shaft. If the Woodruff key in the slot is defective, replace it at this time. Mount the new gear in place on the shaft. Insert and secure the inner and outer Bristo set screws in the new gear.

3.84 Gear (C): To replace gear (C), remove gear (A) as outlined in 3.83. Straighten and remove the cotter pin from the shaft with the P-long nose pliers. Remove the castellated nut with the R-1317 wrench and remove the washer. Gear (C) which consists of two gears may now be removed from the shaft. If the Woodruff key in the slot on the shaft is defective, replace it at this time. Before substituting the new gear on its shaft, rotate the friction rolls so that the slot is uppermost. Then slip the gear onto the shaft so that the keyway in the hub of the gear is at the top permitting the gear to slip over the Woodruff key. If the gear binds on the key, it is an indication that the key has slipped out of place. To check this and to guide the gear over the key, rotate the gear and shaft 1/4 turn in a counter-clockwise direction and with a finger behind the gear keep the key located properly in the slot. If the gear still jams on the key, back off the gear and shift the key into position, then while holding the key in this position, slip the gear over the key. Before securing the gear, make sure that the gear hub rests against the shoulder of the shaft. Place the steel washer over the end of the shaft, and over the washer place the castellated nut and tighten it securely with the R-1317 wrench. Then insert the cotter pin in place and spread the split end with the P-long nose pliers. Remount gear (A) as outlined in 3.83.

3.85 Gear (L): To replace gear (L), remove the cotter pin, castellated nut and washer as outlined in 3.84 and slide the gear off the shaft. If the Woodruff key is defective, replace it at this time. Substitute the new gear and assemble the parts that were removed as outlined in 3.84.

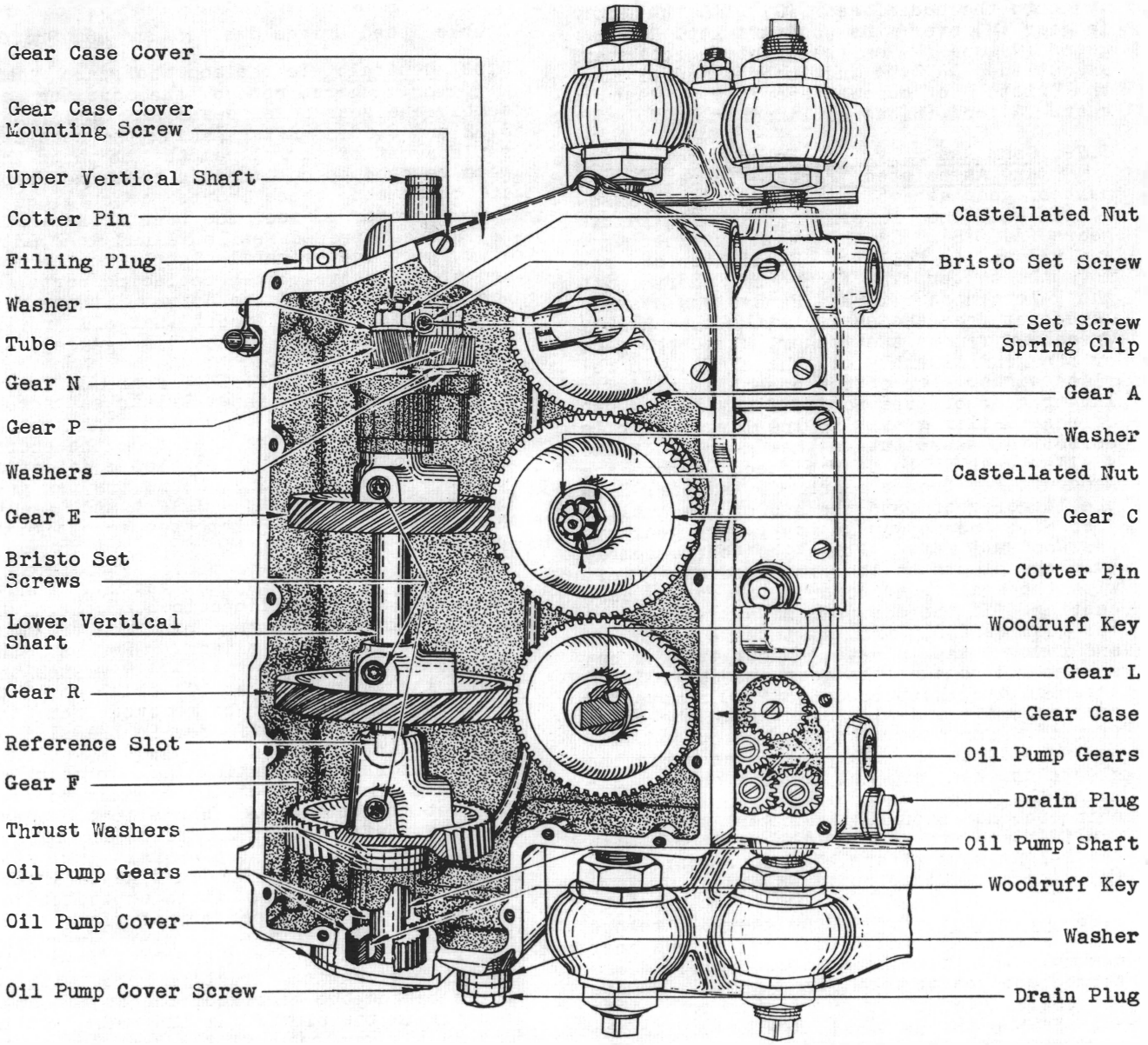


Fig. 80 - Gear Train Assembly Double Speed Drives
(Nos. 45A and 46A Drives)

3.86 Gear (N) and Woodruff Key: In order to replace gear (N) or any part mounted on the upper or lower vertical shafts, remove the oil pump cover screws with the No. 344 screwdriver, and remove the cover. Remove the castellated nut from the lower vertical shaft with the R-1770 wrench and remove the washer just below the nut. Then remove gear (N) from the lower vertical shaft, sliding it off the Woodruff key on the shaft. It may be necessary to rotate either or both gears (P) and (N) to effect its removal. If the Woodruff key is to be replaced, remove it at this time. Substitute the new part and remount the washer and castellated nut as outlined above.

3.87 Gears (E), (R) and (F) and Thrust Washers (Worm End): To replace gear (E), (R), (F) or a thrust washer, remove gear (N) as outlined above. Remove the outer Bristo set screws from the hubs of the gears mounted on the lower vertical shaft and loosen the inner screws with the No. 296 wrench. Then slide the shaft downward through the casting until the gear or the thrust washer to be replaced can be removed. If a thrust washer is to be replaced, note the positions of the washers so that they will be remounted in their original positions. To replace gear (E), remove gears (R) and (F), and to replace gear (F), remove gear (R) as well as

gear (E). To replace a thrust washer, remove all the gears before removing the washer. Substitute the new part and remount the thrust washers and gears that were removed as outlined above.

3.88 Gears (E), (R), Set Screw Spring Clip, Thrust Collar and Thrust Washers (Non Worm End): To replace gear (E) or (R), set screw spring clip, thrust collar or thrust washer, remove gear (N) as outlined above. Remove the set screw spring clip and the outer Bristo set screws mounted in the hub of the gears and in the thrust collar mounted on the lower vertical shaft and loosen the inner Bristo set screws with the No. 296 wrench. Slide the shaft downward through the casting until the part to be replaced can be removed. If a thrust washer is to be replaced, note the positions of the washers so that they will be returned in their original positions. To replace gear (E), remove gear (R) and to replace the thrust collar remove gear (R) as well as gear (E). To replace the thrust collar or thrust washer, remove all the gears before removing the part. Substitute the new part and remount the thrust washers and gears that were removed as outlined above. Raise the vertical shaft until it just clears the bottom of the gear case so that it will not rub on the oil pump cover when it is remounted. Before securing gear (F) on the worm end, raise or lower the gear until the upper edge of the hub is in alignment with the lower edge of the upper reference slot on the vertical shaft. Before securing the thrust collar on the end of the shaft raise or lower the collar until the upper edge of the collar is in alignment with the lower edge of the lower slot. Tighten the inner and outer Bristo set screws securely while holding the gear in this position. Remount the oil pump cover and insert and tighten the mounting screws securely. Then remount gear (N) as outlined in 3.86 and align the gears that were removed as outlined in 3.52.

3.89 Lower Vertical Shaft: To replace the lower vertical shaft, remove gears (N), (E), (R), (F) or thrust collar and the thrust washers as outlined above. Remove the shaft from the gear case. Remove the spur gear from the lower end of the shaft and the Woodruff keys from the upper and lower ends of the shaft and assemble them on the new shaft. Then place the spur gear on the Woodruff key. Insert the shaft up through the bottom of the gear case. Place the thrust washers on the shaft in their original positions and remount gears (F), (R), (E) and (N) as outlined above.

3.90 Set Screw Spring Clip, Gear (P), Thrust Washers and Upper Vertical Shaft: To replace the set screw spring clip, gear (P), a thrust washer, or the upper vertical shaft, remove the lower vertical shaft as outlined in 3.89. Remove the vertical drive shaft coupling as outlined in the section covering this apparatus. Remove the set screw spring clip from gear (P) with the P-long nose pliers. If the spring clip is defective, replace it. If gear (P) or the thrust washers are defective, loosen the Bristo set screw that holds gear (P) to the upper vertical shaft with the No. 296 wrench. Slide the shaft down through the gear case and remove the gear. If the washers are defective, replace them. Substitute the new gear and remove the Bristo set screw from the defective gear and place it in the new gear. Insert the shaft up through the gear and place the lower half of the eccentric coupling against the shaft with the coupling pin in the slot of the shaft. Slide the shaft down until it rests on the thrust washers. With the shaft in position and with the gear resting on the thrust washers, tighten the Bristo set screw securely. Then remount the set screw spring clip. Reassemble the lower vertical shaft and gears as outlined above. To replace the upper vertical shaft, loosen the Bristo set screw in gear (P) as outlined above. Remove the lower vertical shaft as outlined in 3.89 and remove the upper vertical shaft from the gear case. Insert the new shaft through the gear case casting and up through the washers and gear (P). Locate the shaft as outlined above and secure the gear on the shaft with the Bristo set screw and remount the set screw spring clip. Reassemble the lower vertical shaft and gears as outlined above.

Double Speed Drives (Nos. 47A and 48A Drives)

3.91 General: To replace the gears, shafts or washers, remove the coupling head and gear case cover as outlined in procedures 3.12 and 3.50. After making the necessary replacements, remount the parts that were removed as outlined in these procedures. The replacement procedures covered in this procedure apply primarily to the worm end of the drive. When replacing parts on the non worm end of the drives these procedures also apply except that all references to gear (F) shall be disregarded.

3.92 Gear (A): To replace gear (A), straighten and remove the cotter pin from shaft with the P-long nose pliers. Remove the castellated nut with the R-1317 wrench and remove the washer. Slide the gear off the shaft. Substitute the new gear and remount the steel washer and castellated nut over the end of the shaft and tighten the nut securely with the R-1317 wrench. Insert the cotter pin in place and spread the split end with the P-long nose pliers.

3.93 Gears (C), (S) or (M): To replace gear (C), (S) or (M) it will be necessary to remove gear (A) from the top friction roll shaft, gears (C), (S) and (M) from the middle friction roll shaft and gear assembly (K) from the intermediate shaft. To do this, proceed as follows. Remove gear (A) as outlined above. Remove the outer

Bristo set screw from the hub of gear (C) and loosen the inner Bristo set screw with the No. 296 wrench. Straighten and remove the cotter pin from the intermediate shaft with the P-long nose pliers and slide the gears off the friction roll and intermediate shafts. With the gear assemblies removed from the shaft proceed as follows to make the necessary replacement of parts. Slide gears (S) and (M) off the hub of gear (C). If gear (C) is to be replaced, remove the Woodruff key and Bristo set screws and place the inner Bristo set screws in the new gear. Place the key in the keyseat of the new gear. Slide gears (S) and (M) on the hub of the new gear with the keyway in gear (M) over the key on gear (C). To replace either gear (S) or (M) slide gear (S) off the hub or gear (M). Make the necessary replacement of parts removing the Woodruff key from the hub of gear (M). If this gear is to be replaced, mount it in the keyway of the new gear. Slide gear (S) over the Woodruff key in the hub of gear (M) and reassemble gears (S) and

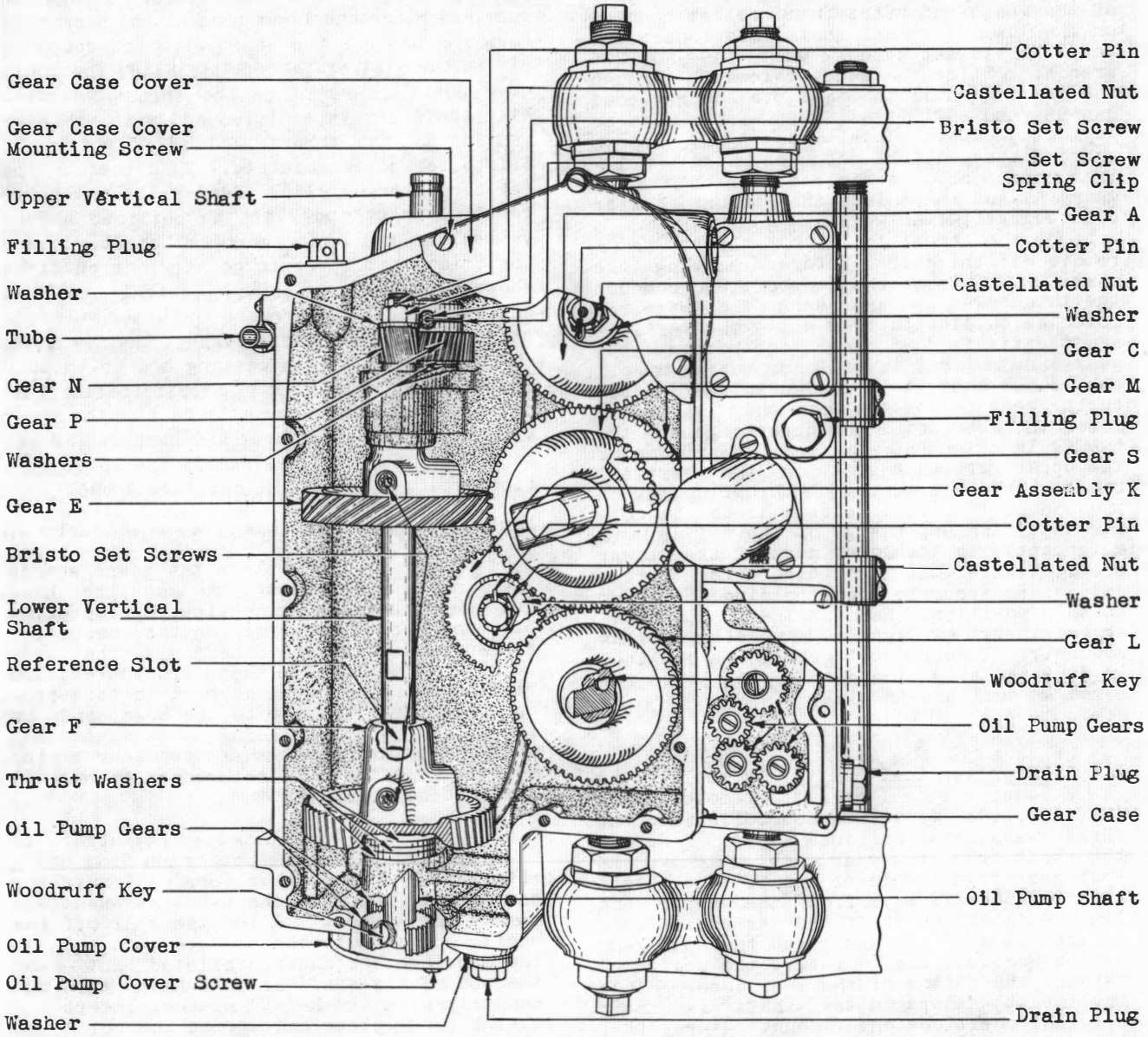


Fig. 81 - Gear Train Assembly Double Speed Drives
(Nos. 47A and 48A Drives)

(M) on the hub of gear (C). Rotate the friction roll so that the keyseat in the shaft is uppermost. Slide the assembly of gears on the friction roll and intermediate shafts over the Woodruff keys as outlined in 3.84.

3.94 Gear Assembly (K): To replace gear assembly (K) or any part of the assembly, remove gears (A), (C), (M) and (K) as outlined above. Follow the procedures outlined in 3.79, for the replacement of parts similar to gear assembly (K) in other double speed drives.

3.95 Gears (N), (E), (F) and (P) and Upper and Lower Vertical Drive Shafts: To replace gear (N), (E), (F) or (P) or an upper or lower vertical drive shaft, follow the procedures outlined in 3.86 to 3.90 for the same parts except that gear (R) covered by this procedure is not furnished on the Nos. 47A and 48A drives. After making the necessary replacements, reassemble the gears and shafts as outlined in the above mentioned paragraphs.

3.96 Gear Case: If a gear case is to be replaced, refer the matter to the supervisor.

Bearing Box and Associated Parts

3.97 Bearing Box Cover: To replace a bearing box cover, remove the bearing box cover mounting screws with the No. 344 screwdriver or the 4" regular screwdriver. Remove any connecting shafts in accordance with the section covering this apparatus. Then remove the cover and substitute the new part. Insert and tighten the cover mounting screws securely.

3.98 Gaskets: To replace a gasket, remove the associated bearing box cover as outlined in 3.97 and remove the gasket. Substitute the new part and remount the cover securely in place.

3.99 Oil Pump Gears and Extension Shaft: To replace an oil pump gear or replacement shaft remove the gear mo nting screw with the 4" regular screwdriver or the shaft with the KS-6367 wrench. Remove gears other than the one to be replaced if it will facilitate the replacement of the part. Substitute the new part and insert and securely tighten the mounting screw on shaft.

3.100 Bearing Box: If the bearing box is to be replaced refer the matter to the supervisor.

Friction Rolls

3.101 If a friction roll is to be replaced, refer the matter to the supervisor.

Miscellaneous Parts

3.102 Guard Plate, Guard Plate Assembly: To replace a guard plate or guard plate assembly, remove the guard plate mounting nut on the side of the bottom channel with the No. 236 wrench or the No. 245 wrench as required, and remove the guard plate. Substitute the new part and fasten it securely in place. Check the clearance between the friction rolls and the guard plate as outlined in the section covering this apparatus.

3.103 Multiple Bank Bracket: To replace a multiple bank bracket, remove the multiple bank as outlined in the section covering piece part data and replacement procedures for panel multiple banks. Hold the multiple bank stud lock nut of the bracket to be replaced with the R-5850 wrench and remove the multiple bank stud with the KS-6367 wrench. Mount and tighten the lock nut and stud on the new bracket. Remove the multiple bank bracket mounting screws with the No. 246 wrench and remove the bracket. Substitute the new part and insert and tighten the mounting screws securely. Then remount the multiple bank as outlined in the section noted above.

Motor Mounting Brackets and Associated Parts

3.104 General: To make any replacement of parts mounted on a bracket, remove the motor from the bracket as outlined in 3.12. It is recommended that brackets that are pinned should be replaced by the Western Electric Company.

3.105 Motor Handle: To replace the motor handle, straighten and remove the cotter pins in the bearing pin with the P-long nose pliers. Remove the bearing pin and the handle. Substitute the new part and insert the pin in place. Then insert the cotter pins.

3.106 Motor Handle Mounting Pin, Washers and Spring: To replace the motor handle mounting pin, remove the motor handle as outlined above. Remove the cotter pins from the other end of the mounting pin with the P-long nose pliers. If the mounting pin is secured by a taper pin instead of a cotter pin, drive out the taper pin with the ball peen hammer and pin punch. Then remove the mounting pin. When the pin is removed, the washers and motor handle spring will be removed at the same time. Mount the parts on the new pin and substitute it in place on the bracket. Secure the handle as outlined above. If either the washers or spring is defective, remove the mounting pin as outlined above and make the necessary replacement of parts.

3.107 Gib and Spring: To replace the gib, remove the motor bracket mounting pin as outlined in 3.106 and remove the gib. If the spring is defective, remove the spring.

Substitute the new part and remount the gib. Then remount the motor handle pin and handle as outlined in 3.106.

3.108 Aligning Screws and Lock Nuts: To replace an aligning screw, note the setting of the screw and proceed as follows. Remove the Bristo set screw with the No. 296 wrench and substitute the new part in the frame or on the bracket to the depth to which the replaced part was previously adjusted.

3.109 Before replacing any part covered herein, check whether the replacing part is coated with a protective film of grease. If it is, remove the grease with KS-7860 petroleum spirits and then lubricate the part, if required, as outlined in the section covering this apparatus.

3.110 Wherever the No. 295 or 296 Bristo setscrew wrenches are specified throughout the section (for use on Bristo setscrews), reference shall be made to the R-2485 or R-2812 Allen hexagon socket setscrew wrenches as alternates where socket setscrews are used.

3.111 Wherever D-98063 cleaning cloth is specified throughout the section, KS-14666 cleaning cloth shall be substituted.

3.112 Replacement of Coupling Guard Mounting Screws by Studs and Nuts: Coupling guards on drives equipped with external oil pipes are secured by screws sealed into the gear case cover. To eliminate the need of breaking the seal each time the coupling guard is removed, studs and nuts may be used. When this modification is to be used, proceed as follows. Remove the mounting screws. Remove the sealing compound from the screw holes as covered in 3.05. Apply fresh compound to the longer threaded portions of the studs and insert and tighten the studs in the gear case cover. Allow the sealing compound to harden and then mount the nuts on the studs.